IN THE UNITED STATES DISTRICT COURT
FOR THE WESTERN DISTRICT OF WISCONSIN

MCP IP, LLC,

Plaintiff,

v.

RAVIN CROSSBOWS, LLC,

Defendant.

OPINION and ORDER

22-cv-4-jdp

Plaintiff MCP IP, LLC alleges that its competitor, defendant Ravin Crossbows, LLC infringes ten MCP patents on crossbows. Ravin denies infringement, alleges that four of the patents-in-suit are invalid, and alleges that one of the patents-in-suit is unenforceable due to inequitable conduct. Both sides have moved for partial summary judgment. Dkt. 77; Dkt. 81; Dkt. 205. The parties have filed a handful of other motions, which the court will address where it makes sense in the context of the opinion below.

The parties to this case make sophisticated crossbows, but their products are still relatively simple mechanical devices. There is no material dispute about the structure or function of the accused devices; the infringement issues turn on matters of claim construction. The court concludes that all the infringement questions can be resolved without trial.

The court will rule on the patents-in-suit as follows:

> U.S. Patent No. 8,991,375: grant summary judgment of noninfringement to Ravin on all asserted claims
>
> U.S. Patent No. 9,255,757: grant summary judgment of noninfringement to Ravin on all asserted claims
>
> U.S. Patent No. 9,476,665: deny summary judgment of noninfringement to Ravin on claim 1 and claim 12; the court will order Ravin to show cause why the court should not grant

summary judgment to MCP for infringement of claim 1 and claim 12 and the asserted claims that depend from those claims

U.S. Patent No. 9,500,433: grant summary judgment of infringement to MCP on all asserted claims; grant summary judgment to MCP on Ravin's counterclaims of invalidity

U.S. Patent No. 9,879,939: grant summary judgment of infringement to MCP on all asserted claims; grant summary judgment to MCP on Ravin's counterclaims of invalidity

U.S. Patent No. 10,690,435: deny summary judgment of noninfringement to Ravin on claim 1; grant summary judgment to MCP on Ravin's inequitable conduct counterclaim; the court will order Ravin to show cause why the court should not grant summary judgment to MCP for infringement of claim 1 and the asserted claims that depend from those claims

U.S. Patent No. 10,480,893: grant summary judgment of noninfringement to Ravin on all asserted claims

U.S. Patent No. 10,866,056: grant summary judgment of noninfringement to Ravin on claims 5, 6, 14, and 15; the court will order Ravin to show cause why the court should not grant summary judgment to MCP for infringement of claim 1 and claim 12 and the remaining asserted claims that depend from those claims

U.S. Patent No. 8,746,220: grant summary judgment of noninfringement to Ravin on all asserted claims

U.S. Patent No. D868,195: grant summary judgment of noninfringement to Ravin on the asserted claim

BACKGROUND

MCP and Ravin are competitors in the crossbow market. MCP's founder and owner is Mathew McPherson, whose company, Mathew Archery, Inc., sells archery equipment under the brand Mission Archery. The entity MCP was formed in 2012 to hold McPherson's patents. Ravin, founded in 2015, sells crossbows and crossbow accessories. Both companies focus their

crossbow business on hunting, a market that has grown significantly as more states have legalized crossbows for use during the archery season of deer hunting.

Modern archery bows and crossbows for hunting are typically compound bows, which use pulleys on the limbs of the bow to gain mechanical advantage when drawing the bow by flexing the limbs. The drawing of the bow string rotates the pulleys, which pull power cables that flex the limbs of the bow. Often the pulleys are cam-shaped, which allows the mechanical advantage to vary as the bow string is pulled back. (In the patents-in-suit, cams are generally referred to as "rotatable members," a term that includes both pulleys and cams. The court will use the terms interchangeably.) A modern compound crossbow can shoot an arrow with great power and accuracy, while demanding less skill than traditional archery with a bow and arrow. The ten patents-in-suit concern, primarily, the arrangement of pulleys and power cables in compound crossbows. The patents will be described in more detail below.

MCP alleges that Ravin's R500 and R500E crossbows infringe claims of all ten patents-in-suit.[1] MCP alleges that Ravin's R26, R26X, R29, and R29X crossbows infringe only the '435 patent. The parties dispute neither the structure nor function of the accused devices (with an immaterial exception pertaining to the '220 patent noted below).

[1] The sole difference between the R500 and R500E crossbow is that the R500E contains an electronic mechanism that can cock the crossbow without manual work. That feature is immaterial to the patents-in-suit, so the court will use "R500" to refer to both the R500 and R500E in this opinion.

ANALYSIS

A. Ravin's motion to strike supplemental expert report of Dr. David Paulus

Before turning to the parties' summary judgment motions, the court addresses Ravin's motion to strike the supplemental report of MCP's expert, Dr. David Paulus. Dkt. 103. Paulus provided his supplemental report, Dkt. 92, on the day that summary judgment opposition materials were due, May 22, 2023, which was well after the deadline for responsive expert reports. This motion affects the evidence that the court will consider at summary judgment, so the court resolves it here.

The scheduling order in this case expressly disallows a third round of rebuttal expert reports. Dkt. 28, at 4. Under the scheduling order, a party may supplement an expert's report pursuant to Federal Rule of Civil Procedure 26(e), but such supplementation "is appropriate only to correct mistakes and oversights, not to include new examples, illustrations, or analyses that could have been included in an original expert report." *Id.* After parties file their responsive expert reports, "[a]ny further expert report is allowed only by stipulation of all parties, or by leave of court." *Id.*

MCP served the Paulus supplemental report more than a month after the deadline for respondent expert reports, without leave from the court or a stipulation with Ravin. MCP contends that Paulus's supplemental report was nevertheless appropriate and timely because it was necessary to "correct mistakes and oversights." Dkt. 114, at 4. Specifically, MCP contends that the information in the supplemental report could not have been provided sooner because it contains Paulus's opinions about computer-aided drafting and design (CADD) files for the accused R500 crossbow that were not available to MCP until April 24, 2023, because of technical and administrative mistakes and oversights by both parties.

That's not the type of error correction that would be justified by Rule 26(e)(1)(A). The late disclosure of the CADD files might provide a good basis for seeking leave to file a supplemental report. But it does not justify a unilateral decision to file and serve an unbidden report so late in the summary judgment briefing process.

In any event, the parties apparently agree that the CADD files were produced after the deadline for serving expert reports because of mistakes by both parties. Accordingly, the court will consider the part of Paulus's supplemental report that analyzes the late-disclosed CADD files, specifically paragraphs 7 through 32. The court will deny the motion to strike that portion of Paulus's supplemental report.

But Paulus's supplemental report is not limited to analysis of the CADD files that were produced after the expert report deadlines. Paulus states that he is "offering this supplemental report primarily to take account of information that was not available at the time [of] [his] initial and rebuttal reports" and that the new information includes "certain arguments in the rebuttal reports of [Ravin's experts Dirk] Duffner and [Lauren] Kindler" as well as arguments that Ravin made "in connection with its motion for summary judgment that were not identified by Ravin in interrogatory responses." Dkt. 92, ¶ 4. Most of Paulus's supplemental report is focused on the *second* category of new information: arguments made in Duffner's rebuttal report and in Ravin's motion for summary judgment. This type of analysis is precisely the response that would be expected in a third round of rebuttal expert reports, which are expressly disallowed by the court's scheduling order. "The duty to supplement does not . . . equate to a right to serve an untimely new report or a report revised to solve deficiencies in the original report." *Noffsinger v. Valspar Corp.*, No. 09 C 916, 2012 WL 5948929, at *2 (N.D. Ill. Nov. 27, 2012). An unexpected or undisclosed argument by an opposing party is not a "mistake or

oversight" that would be appropriate to address in a supplemental report under the auspices of Rule 26(e). If MCP believed that there was something unfair about the purportedly new theories in Ravin's rebuttal report or summary judgment motion, the appropriate way to address that would have been to seek leave from the court or to obtain Ravin's stipulation to another expert report.

The court will exclude Paulus's opinions about the "latch" limitation of the '435 patent and his opinions about the '220 patent. Dkt. 92, ¶¶ 33–61. But the court will not exclude Paulus's opinions about Ravin's alleged design arounds. For reasons that will be discussed in more detail in Section J.1, *infra*, supplemental expert disclosure is warranted. The question of design arounds is really a damages issue, not an issue for summary judgment.

B. Overview of the summary judgment issues

The parties' summary judgment motions raise both infringement and invalidity issues. As for infringement, MCP affirmatively moves for summary judgment of infringement of the '433 patent and the '939 patent by Ravin's R500 crossbows. Ravin moves for summary judgment of noninfringement for all patents-in-suit.

The parties raise prior-art-based validity issues and validity issues regarding the formal requirements of 35 U.S.C. § 112. As for the prior art issues, MCP affirmatively moves for summary judgment of validity of the '433 patent and the '939 patent, contending that the patents are not anticipated and not obvious. As for the § 112 issues, MCP moves for summary judgment that the asserted claims in nine of the patents-in-suit (all except the '195 patent) are not indefinite, and that none of the asserted claims in the '893 patent or the '056 patent lack adequate written description.

MCP also moves for summary judgment that the '435 patent is not unenforceable due to inequitable conduct.

C. Basic legal principles

Summary judgment is appropriate if the moving party shows that there is no genuine dispute of material fact and that the movant is entitled to judgment as a matter of law. Fed. R. Civ. P. 56(a). On cross-motions for summary judgment, the court construes the facts, and draws all reasonable inferences from those facts, in favor of the nonmovant on the motion under consideration. *Wis. Cent., Ltd. v. Shannon*, 539 F.3d 751, 756 (7th Cir. 2008).

The court applies a two-step analysis to evaluate both infringement and invalidity. Each begins with claim construction, after which the court determines whether the claim, as properly construed, is infringed by the accused device or is invalid. *Kemco Sales, Inc. v. Control Papers Co.*, 208 F.3d 1352, 1359 (Fed. Cir. 2000) (infringement); *Smiths Indus. Med. Sys., Inc. v. Vital Signs, Inc.*, 183 F.3d 1347, 1353 (Fed. Cir. 1999) (invalidity). At summary judgment, the court bears in mind that MCP will have the burden to prove infringement by a preponderance of the evidence and that Ravin will have the burden to show invalidity or inequitable conduct by clear and convincing evidence. *High Point Design LLC v. Buyer's Direct, Inc.*, 621 F. App'x 632, 638, 640 (Fed. Cir. 2015).

A patent's claims define the scope of the invention, and thus the scope of the patentee's right to exclude others from practicing that invention. *Phillips v. AWH Corp.*, 415 F.3d 1303, 1312 (Fed. Cir. 2005) (en banc). Claim construction is the process by which the court determines the meaning and scope of the patent claims asserted to be infringed. *O2 Micro Int'l Ltd. v. Beyond Innovation Tech. Co., Ltd.*, 521 F.3d 1351, 1360 (Fed. Cir. 2008) (internal quotation marks omitted). Claim language receives its "ordinary and customary meaning,"

which "is the meaning that the term would have to a person of ordinary skill in the art in question at the time of the invention." *Phillips*, 415 F.3d at 1313. Sometimes "the ordinary meaning of claim language . . . may be readily apparent even to lay judges, and claim construction in such cases involves little more than the application of the widely accepted meaning of commonly understood words." *Id.* at 1314. Other times, the ordinary and customary meaning of a claim term is not manifestly clear. If such a term is disputed and material to an issue in the case, the court must construe the term to establish its meaning.

When construing a disputed term, the court must begin with the claim language itself, which provides substantial guidance. *Id.* But the court reads the claim language "not only in the context of the particular claim in which the disputed term appears, but in the context of the entire patent, including the specification" and its prosecution history. *Id.* at 1313. The patent and its prosecution history, including the prior art that was cited during the examination of the patent, constitutes the intrinsic evidence of the claims' meaning. *Id.* at 1317. Of these sources, "the specification is always highly relevant to the claim construction analysis. Usually, it is dispositive; it is the single best guide to the meaning of a disputed term." *Id.* at 1315 (internal quotation marks omitted).

The court may also consider extrinsic evidence, which refers to all other types of evidence, including inventor testimony, expert testimony, documentary evidence of how the patentee and alleged infringer have used the claim terms, dictionaries, treatises, and other similar sources. *Id.* at 1317–18. But extrinsic evidence is less reliable and less useful in claim construction than the patent and its prosecution history. *Id.* at 1318. Intrinsic evidence trumps any extrinsic evidence that would contradict it. *Id.* at 1314–16.

Under an infringement analysis, the court must compare the properly construed claims to the accused device to determine as a matter of fact whether every claim element is present, either literally or by a substantial equivalent, in the accused device. When, as here, the parties do not dispute the material aspects of the accused device but disagree over the meaning of the asserted claims, the question of infringement turns on claim construction and is amenable to resolution on summary judgment. *Gen. Mills, Inc. v. Hunt-Wesson, Inc.*, 103 F.3d 978, 983 (Fed. Cir. 1997); *Athletic Alts., Inc. v. Prince Mfg., Inc.*, 73 F.3d 1573, 1578 (Fed. Cir. 1996).

D. Over-under patents (the '375, '757, and '665 patents)

1. Introduction

The court will refer to three of the patents-in-suit, the '375 patent, the '757 patent, and the '665 patent as the "over-under patents" or the '375 patent family. The three patents share a common specification because the '757 patent is a continuation of the '375 patent, and the '665 patent is a continuation of the '757 patent.

The over-under patents disclose and claim a cabling arrangement in which two power cables run between the pulleys on each of the crossbow's limbs, with one power cable passing over the shooting axis and the other passing below it. The advantage of the claimed cabling arrangement is that it balances the forces on the pulleys and yet maintains a space for the arrow. As the specification puts it:

> In some embodiments, the first cable 18 is positioned above the shooting axis 34 and the second cable is positioned below the shooting axis 34. This arrangement helps to balance forces in the crossbow 10, for example reducing rotatable member 14 lean when compared to a crossbow that routes multiple cables on a common side of the shooting axis 34.

'375 patent, 2:64–3:4. An embodiment is shown in the following figure:

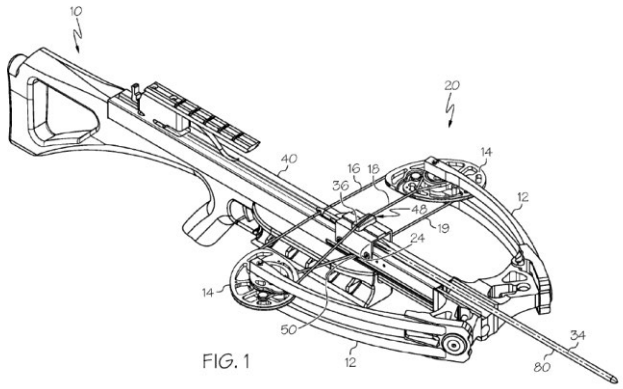

FIG. 1

’375 patent, Figure 1. In this figure, the power cables (reference numbers 18 and 19) are routed over and under the stock (reference number 40) with a cable positioner (reference number 48) keeping the upper power cable out of the flight path of the arrow or bolt.

Claim 1 of the ’375 patent is a representative independent claim:

> A crossbow comprising:
>
> a stock, a first limb, a first rotatable member, a second limb and a second rotatable member;
>
> a bowstring extending between the first rotatable member and the second rotatable member;
>
> a first cable extending between the first rotatable member and the second rotatable member and a second cable extending between the first rotatable member and the second rotatable member;
>
> a first cable positioner attached to said stock;
>
> wherein the crossbow defines a shooting axis, the first cable is offset from the shooting axis in a first direction and the second cable is offset from the shooting axis in a second direction different from the first direction, said first cable positioner biasing the first cable away from said stock, at least a portion of said first cable positioner moveable with respect to said stock.

’375 patent, 7:47–64.

Ravin has not asserted that any of the over-under patents are invalid, and it has withdrawn its contention that the claims of the '665 patent are indefinite. Dkt. 93, at 82.[2] The only remaining issue for the over-under patents is whether Ravin is entitled to summary judgment of noninfringement.

2. Infringement

Ravin moves for summary judgment of noninfringement of all the asserted claims in the '375 patent family, but the parties focus their arguments on the asserted independent claims: claims 1 and 18 of the '375 patent; claim 18 of the '757 patent; and claims 1 and 12 of the '665 patent.[3] Ravin proffers three noninfringement theories for the over-under patents. First, the R500 does not meet the "extending between" limitation that is expressly present in the independent claims of the '375 patent and the '757 patent, and implicit in the independent claims of the '665 patent. Second, the R500 does not have a cable positioner "arranged to bias" the power cables as required by claim 12 of the '665 patent. Third, the R500 does not have a cable positioner "biasing" the first or second cable as required by claims the independent claims of the '375 patent and the '757 patent, and by claim 1 of the '665 patent.

[2] In the parties' joint summary judgment claims chart, Ravin didn't contend that the asserted claims of the '375 patent, the '757 patent, or the '665 patent were invalid as indefinite. Dkt. 113, at 3. But that isn't quite correct because Ravin contends that the claim term "stock" is indefinite, Dkt. 93, at 75, and the over-under patents contain that claim term. The court discusses Ravin's indefiniteness counterclaim regarding "stock" in Section G.3, *infra*.

[3] The asserted dependent claims are claims 2, 3, 4, 6, 7, 8, 9, 10, 19, and 20 of the '375 patent; claim 19 of the '757 patent; and claims 2, 3, 4, 6, 7, 8, 10, 11, 13, 15, 16, 17, and 18 of the '665 patent.

a. The "extending between" limitation

The independent claims of the '375 patent and the '757 patent each require, among other limitations, that the bowstring and the power cables "extend between" the rotatable members on the limbs of the bow. As phrased in claim 1of the '375 patent:

> a bowstring **extending between** the first rotatable member and the second rotatable member;
>
> a first cable **extending between** the first rotatable member and the second rotatable member and a second cable **extending between** the first rotatable member and the second rotatable member;

'375 patent, 7:51–56 (emphasis added). The parties dispute whether the term "extending between" means that the cable must be connected to or at least touch the second rotatable member. Ravin proposes that "extending between" means: "extending between and contacting the first rotatable member and contacting the second rotatable member." Dkt. 62, Ex. 1, at 2.[4] MCP proposes: "at, into, or across the space separating." *Id.*

The specification of the over-under patents provides sparse explanation of the invention and its background. The specification says that the invention balances the forces in the crossbow and reduces the lean of the rotatable members that occurs when both power cables are routed on one side of the shooting axis. '375 patent, 2:65–3:4. But beyond that, the specification provides only descriptions of the physical configuration of various embodiments. The specification does not provide any special definition of "extending between." Neither side's expert says that "extending between" is a term of art in the field. Indeed, MCP's expert cites

[4] Citations to filings from the docket use the page numbers assigned by CM/ECF, not the page numbers in the original document.

ordinary dictionary definitions of "between" for MCP's proposed definition. Dkt. 74, ¶ 61. The court will give the term "extending between" its ordinary meaning, at least as a starting point.

MCP's proposed construction is inadequate because it is simply the definition of "between." It fails to capture the concept of "extending." In the context of these patents, the pertinent definition of "extending" is to reach to a specified point. *See Extend*, at 5a, Webster's Third New International Dictionary (1981). So, "extending between" means *to reach from one specified point to another*. It's not enough, as MCP suggests, that the bowstring or the power cable be "at" or "into" the space between the rotatable members.

But giving "extending between" its ordinary meaning doesn't fully resolve the question of whether the power cable must contact or be connected to both rotatable members. Both sides base their claim construction arguments on the embodiments found in the specification and related patents. This is a risky approach for Ravin, because it is a cardinal rule of claim construction that features of the disclosed embodiments are not to be read into the claims as limitations. *Teleflex, Inc. v. Ficosa N. Am. Corp.*, 299 F.3d 1313, 1326 (Fed. Cir. 2002). But the embodiments disclosed in the specification may shed light on the inventor's intended meaning of the claim terms. *Edwards Lifesciences LLC v. Cook Inc.*, 582 F.3d 1322, 1329–30 (Fed. Cir. 2009); *C.R. Bard, Inc. v. U.S. Surgical Corp.*, 388 F.3d 858, 865 (7th Cir. 2004). This is particularly true of a specification, like the common specification of the over-under patents, that consists almost exclusively of a description of various embodiments.

There's no dispute here that, in every compound bow, the bow string must be attached to both rotatable members; that's a functional requirement for a compound bow. Nor is there any dispute that, in every compound bow, the power cables must be attached to at least one rotatable member; that's also a functional requirement. So it's a given that the compound bows

here would have both features—otherwise, they wouldn't work. The question is whether the invention requires that the power cables be attached to the second rotatable member. Ravin argues in the affirmative, pointing out that, in all the embodiments in the specification, the power cables are attached to the second rotatable member as well as the first.

MCP's counterargument is that figures 4 and 5 of the '375 patent show an embodiment in which the second end of the power cable is *not* attached to the rotatable member. Here is a detail from figure 4 illustrating the connection of the power cable, reference number 18:

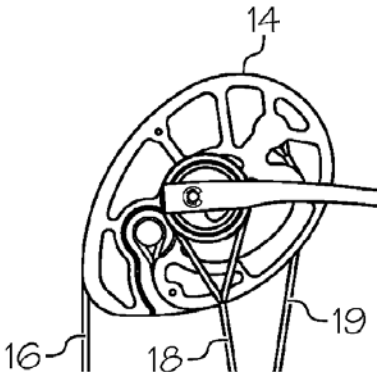

'375 patent, Figure 4. MCP contends that the power cable is not connected to the rotatable member; instead, it is connected to a round "anchor" that does not rotate with the rotatable member as the bow is drawn. That's a fair description of the embodiment, as far as it goes. But the perspective view in figure 6 shows that that round anchor is itself in immediate proximity to the rotatable anchor. Consider this detail from figure 6:

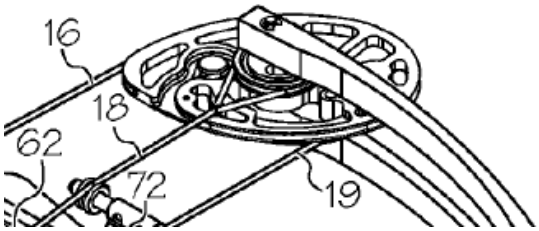

’375 patent, Figure 6. The round anchor adjacent to the second rotatable member is in a similar position to the anchor that attaches the other end of the power cable to the first rotatable anchor. So, although the second end of the power cable is not directly connected to the second rotatable member, it’s indirectly connected to it. And it would be consistent with the plain meaning of the term “extending between” to say that the power cable reaches from the first rotatable member to the second rotatable member.

MCP also cites figure 7 of the ’220 patent, which shows a power cable that, according to MCP, is not attached to the rotatable member. Here is figure 7 of the ’220 patent:

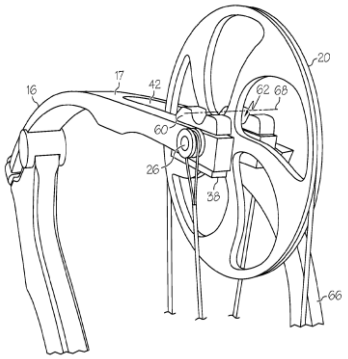

FIG. 7

’220 patent, Figure 7. Both independent claims of the ’220 patent include the limitation that the power cable extends between the first and second rotatable members. ’220 patent, 6:34–37, 7:6–9. MCP contends that the term “extending between” cannot be construed to exclude the configuration illustrated in figure 7 because that would exclude a preferred embodiment, Dkt. 82, at 23, and a claim interpretation that excludes a preferred embodiment is disfavored, *Accent Packaging, Inc. v. Leggett & Platt, Inc.*, 707 F.3d 1318, 1326 (Fed. Cir. 2013) (citation omitted). But the court is not persuaded that the use of the term “extending between” in the ’220 patent is strong evidence of that term’s meaning in the over-under patents: the ’220 patent

is not in the same patent family, and the '220 patent is not directed to a cabling configuration designed to balance the forces in a crossbow, which is the key advantage of the invention in the '375 patent family.

The court also considers the purpose of the invention and the means by which it is achieved when determining the meaning of disputed patent claim terms. *See Cross Med. Prods., Inc. v. Medtronic Sofamor Danek, Inc.*, 424 F.3d 1293, 1306 (Fed. Cir. 2005). The stated purpose of the invention is to balance the forces in the crossbow, specifically the forces that would cause the rotatable member to lean, which would happen if both power cables were routed on the same side of the shooting axis. '375 patent, 2:64–3:4. The means of accomplishing this balance is to run one power cable above the shooting axis and the other below it. The invention as claimed also requires a cable positioner to deflect ("bias" or "offset" in the words of the claims) the power cables away from the shooting axis. '375 patent, 7:57–64. The offsetting is required because the rotatable members are coplanar with the shooting axis and thus the power cables must be pushed up or down to make way for the arrow. *See* '375 patent, 1:60–65. So, to achieve the balancing of the forces from the power cables, the power cables are routed from one rotatable member through the cable positioner to the other rotatable member. If the second end of the power cable did not terminate at the second rotatable member, the forces acting on the rotatable member would be unbalanced, tending to cause the rotatable member to lean. *See* '375 patent, 2:50–55.

The court concludes that the claim element "extending between the first rotatable member and the second rotatable member" requires that the power cable contact or attach to both rotatable members. The attachment may be indirect, as in figure 4 of the specification of the over-under patents.

Applying this construction, the R500 does not meet the "extending between" limitation of the '375 and '757 patents. The R500 uses a double limb arrangement with four power cables, two above the shooting axis and two below. The first ends of the power cables are attached to an anchor on the first rotatable member, as claimed. But the other end is attached to an anchor which is itself attached to one of the limbs. Given the double-limb arrangement, the second end of the power cable is offset a considerable distance from the second rotatable member. The double-limb arrangement is shown in the photo below:

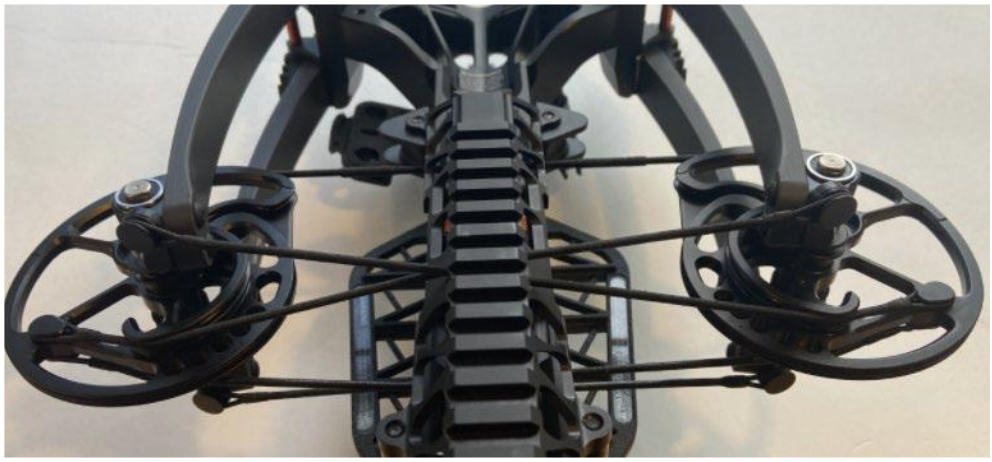

Dkt. 74, ¶ 105. The power cables do not extend between one rotatable member and the other. Rather, each power cable extends between one rotatable member and an anchor on one of the opposing limbs of the crossbow. Consider this photo showing that one end of the power cable attaches to an anchor on one of the crossbow's limbs rather than a rotatable member:

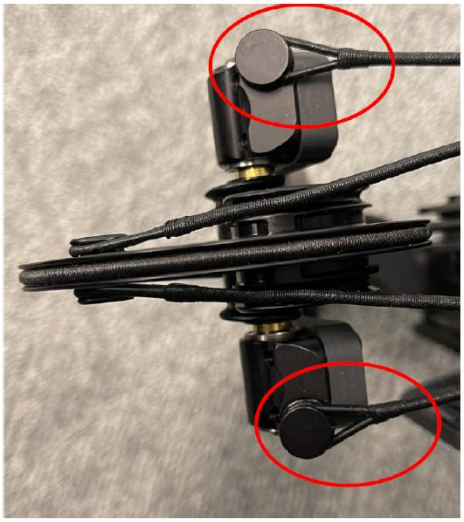

Dkt. 111, ¶ 179.

MCP makes an alternative argument: the R500 infringes under the doctrine of equivalents. If a claim element is not literally present in the accused product, it may infringe under the doctrine of equivalents if the accused product performs substantially the same function in substantially the same way to obtain the same result. *Lite-Netics, LLC v. Nu Tsai Cap. LLC*, 60 F.4th 1335, 1346 (Fed. Cir. 2023).

MCP's argument under the doctrine of equivalents is weakly supported. The entire analysis by MCP's expert, Dr. Paulus, is only a scant paragraph:

> Using [Ravin's] claim construction, the Ravin R500/R500E design of the cable extending between the cams and the opposing axle housing structure (see discussion above) would still be performing the same function, which is allowing the cams to be drawn together as the bow is drawn. The R500/R550E would be performing that function in the same way by rotating the cams and "taking up" the cables on the cams. And the result is the same—energy is stored in the limbs as a result of the above operation.

Dkt. 74, ¶ 121. Such a vague and conclusory opinion is not sufficient to support a finding of infringement under the doctrine of equivalents. *See, e.g.*, *Akzo Nobel Coatings, Inc. v. Dow Chem. Co.*, 811 F.3d 1334, 1342–43 (Fed. Cir. 2016).

Paulus did not adequately consider the function of the "extending between" element, which is not merely to pull the limbs together, but also to balance the forces on the rotatable elements and clear the shooting axis. But the most glaring shortcoming of Paulus's analysis is that it fails to consider the way the *accused device* achieved that function. The R500's double-limb arrangement clears the shooting axis primarily by terminating the second end of the power cable at an anchor positioned well above the second rotatable member. And the dual limb arrangement balances the forces on the rotatable member by using two pairs of power cables. On each side, one power cable is attached above the rotatable member, with another balancing cable attached below it. This is not the method claimed in the over-under patents. Ravin is entitled to summary judgment of noninfringement of the '375 and '757 patents because the R500 does not meet the "extending between" limitation of those patents.

Ravin contends that the court's holding regarding the "extending between" limitation should also apply to the '665 patent. The "extending between" limitation is not expressly included in either of the asserted independent claims of the '665 patent (claim 1 and claim 12). But Ravin contends that the limitation is *implicitly* present in those claims. Dkt. 78, at 17. Claim 1 of the '665 patent reads as follows, with the pertinent terms in bold:

> A crossbow comprising:
>
> a stock and a bow portion;
>
> the bow portion comprising a first limb supporting a first rotatable member, a second limb supporting a second rotatable member, **a first cable segment**, **a second cable segment**, and a bowstring;

> a first cable positioner contacting the stock and moveable with respect to the stock, the first cable positioner biasing the first cable segment away from the stock;
>
> wherein the crossbow defines a shooting axis, the first cable segment is offset from the shooting axis in a first direction and the second cable segment is offset from the shooting axis in a second direction different from the first direction.

'665 patent 8:2–16 (emphasis added).

Here is Ravin's argument in capsule form. The '665 patent shares its specification with the '375 patent. There is no explanation in the specification of the "first cable segment" or the "second cable segment"; those terms appear in the claims of only the '665 patent. But the specification *does* discuss the power cables that extend between the first and second rotatable members. So the "first cable segment" and "second cable segment" must be construed to mean cable segments that extend between the two rotatable members.

The problem with Ravin's argument is that the claim language ("cable segment") is neither ambiguous nor a term of art in the field, and the inventor has not provided any special definition of the term. The ordinary meaning of "cable segment" does not require that the segments extend between the two rotatable members. Ravin's argument is just an attempt to narrow the scope of the '665 patent by reading into the claims features of the embodiments, a cardinal sin of claim construction. The court's holding regarding the "extending between" limitation does not apply to the '665 patent because the independent claims of the '665 patent do not include the "extending between" limitation.

b. The "biasing" limitation

The asserted independent claims of the over-under patents also require a cable positioner "biasing" the power cables away from the shooting axis. For example, as the requirement is stated in claim 1 of the '665 patent:

> a first cable positioner contacting the stock and moveable with respect to the stock, **the first cable positioner biasing the first cable segment away from the stock**;

'665 patent 8:8–10 (emphasis added).

The pertinent arrangement of the cables is shown in this annotated photo of the accused device, showing the R500 viewed from the rear of the crossbow:

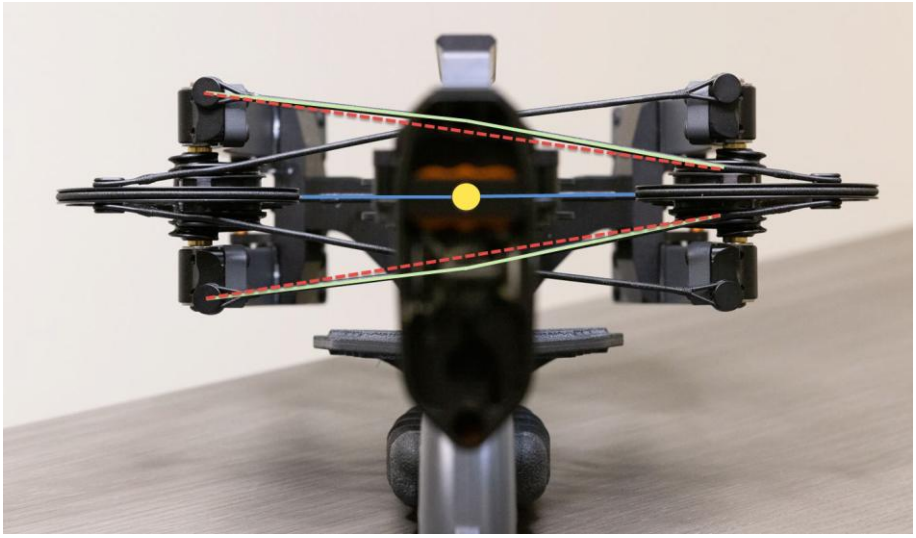

DKt. 74, ¶ 118. As the photo shows, the four power cables follow the same route; each power cable extends from an anchor on one side's cam to an anchor on the opposite side's limb. The two green lines in the photo represent two of the four power cables; both power cables extend from an anchor on the right-side cam to an anchor on the left-side limb. The photo also contains two dotted red lines; each dotted red line illustrates the direct path from cam anchor to limb anchor. As the photo shows, neither power cable takes the direct path. If they did, the green lines and the dotted red lines would overlap. But they don't. Instead, there is a gap between the green lines and the dotted red lines (look above and below the yellow dot, representing the position of the arrow).

The gap between the green lines and the dotted red lines is caused by cable positioners. One of the cable positioners is shown in this photo, viewing the R500 from the side:

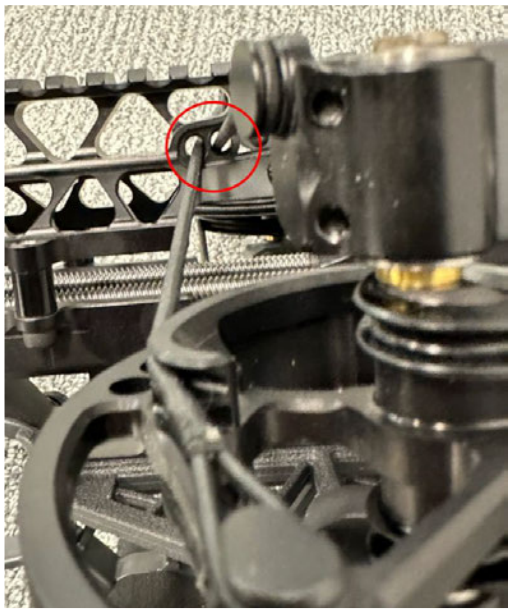

Dkt. 69, ¶ 166. The cable positioner is in the red circle. It's hard to tell from the photo, but the cable positioner is located about halfway through the path of the top green line in the previous photo, above the yellow circle.

The two photos show that the cable positioners deflect the power cables away from the shooting axis—that's why there are gaps between the green lines and the dotted red lines in the first photo. Ravin does not dispute that the cable positioner of the R500 deflects the power cable away from the shooting axis. Instead, Ravin argues that the "biasing" limitation must be construed to mean that the cable positioner is *purposely designed* to deflect the power cable away from the shooting axis. Dkt. 78, at 45. And, the argument goes, the power cables in the R500 are "naturally" positioned away from the shooting axis because they attach to an anchor on the limb, which is high enough to keep the power cable out of the way. Any biasing by the cable positioner is merely incidental rather than deliberate. Once again, Ravin is improperly reading a limitation into the claims.

The court concludes that the R500 meets the "biasing" limitation of claim 1 of the '665 patent.[5] The court will deny Ravin's motion for summary judgment of noninfringement of claim 1 of the '665 patent.

c. The "arranged to bias" limitation

Claim 12 of the '665 patent requires a bit of further analysis, because of the way the biasing limitation is phrased in that claim. Claim 12, with the pertinent language in bold, reads:

> A crossbow defining a shooting axis, the crossbow comprising:
>
> a stock, a finger trigger, a first limb supporting a first rotatable member, a second limb supporting a second rotatable member, a first cable segment and a bowstring;
>
> **a first cable positioner arranged to bias the first cable segment away from the shooting axis**, the first cable positioner comprising a channel, the first cable segment positioned in the channel;
>
> wherein the finger trigger is located below the shooting axis and the first cable positioner is located above the shooting axis.

'665 patent 8:46–58 (emphasis added).

Ravin makes a similar argument for the "arranged to bias" limitation in claim 12 as it did for the "biasing" limitation in claim 1. Ravin argues that "arranged to bias" means "designed to bias," thus requiring that the cable positioner be designed for the purpose of moving the power cable away from the shooting axis. Dkt. 78, at 47. According to Ravin, the R500's cable positioner doesn't serve that purpose because the power cables are naturally positioned away

[5] The R500 also meets the "biasing" limitation of claims 1 and 18 of the '375 patent and claim 18 of the '757 patent. But MCP must prove that the accused device meets all the limitations in the asserted claims. So even if the R500 meets the "biasing" limitation in the '375 patent and the '757 patent, that is immaterial given the court's holding that the R500 doesn't meet the "extending between" limitation in those patents.

from the shooting axis; the second end of the power cable is attached to an anchor that is away from the cam. So, the argument goes, even without the cable positioner, the power cables would stand clear of the shooting axis.

The Federal Circuit has considered the meaning of an analogous term ("adapted to") in several cases, recognizing that the phrase has both a broad meaning and a narrower one. *In re Chudik*, 851 F.3d 1365, 1373 n.3 (Fed. Cir. 2017) ("arranged to" is analogous to "adapted to"). For example, in *In Aspex Eyewear, Inc. v. Marchon Eyewear, Inc.*, the Federal Circuit explained:

> In common parlance, the phrase "adapted to" is frequently used to mean "made to," "designed to," or "configured to," but it can also be used in a broader sense to mean "capable of" or "suitable for." See *Webster's Third New International Dictionary* 24 (1968) ("suited by nature, character, or design to a particular use, purpose, or situation"); 1 *Oxford English Dictionary* 139 (2d ed. 1989) ("fitted; fit, suitable . . . modified to fit new situations").

672 F.3d 1335, 1349 (Fed. Cir. 2012); *see also In re Man Mach. Interface Techs. LLC*, 822 F.3d 1282, 1286 (Fed. Cir. 2016) ("We have noted that the phrase 'adapted to' generally means 'made to,' 'designed to,' or 'configured to,' though it can also be used more broadly to mean 'capable of' or 'suitable for.'" (citations omitted)).

The court agrees that the narrower definition—"designed to" or "configured to"—is the appropriate one in the context of this case. No one suggests here that "arranged to" should be construed in the broader sense to mean "capable of." Whether the cable positioner biases the power cable away from the shooting axis doesn't depend, for example, on how the archer uses the crossbow. But the narrower definition doesn't entail, as Ravin suggests, that "arranged to" means that the inventor intended a particular purpose for a feature of the invention. As MCP correctly notes, a fundamental principle of patent law is that intent is not an element of patent

infringement. Dkt. 98, at 53 (citing *Warner-Jenkinson Co., Inc. v. Hilton Davis Chem. Co.*, 520 U.S. 17, 35 (1997) and *Embrex, Inc. v. Serv. Eng'g Corp.*, 216 F.3d 1343, 1353 (Fed. Cir. 2000)).

Ravin contends that the prosecution history of the '665 patent also supports its proposed strict construction of "arranged to" because the inventor of the '665 patent disclaimed from claim 12 a crossbow with power cables that, due to their natural position, stand away from the shooting axis.

The original language of the relevant portion of claim 12 was as follows:

> a first cable positioner arranged to bias the first cable segment.

Dkt. 80, Ex. 4, at 3. The patent examiner rejected the original claim 12 as anticipated in view of U.S. Patent No. 0,030,666 to Darlington, a patent related to compound archery crossbows; the examiner also rejected the original claims 13, 14, and 15 as obvious in view of Darlington. *Id.* at 6, 11–13. The examiner stated that Darlington taught a cable positioner located above the shooting axis that would bias the cable portion away from the shooting axis.

To overcome the rejection, the inventor made two amendments. First, he amended the pertinent portion of claim 12 by incorporating the recitals of original claim 15, which had not been rejected as anticipated by Darlington. The inventor argued that the anticipation objection was mooted by the inclusion of the additional limitations. Second, to overcome the obviousness objection, the inventor also added a limitation that specified that the cable positioner must bias the first cable segment "away from the shooting axis." Thus amended, that portion of claim 12 took its final form:

> a first cable positioner arranged to bias the first cable segment away from the shooting axis, the first cable positioner comprising a channel, the first cable segment positioned in the channel.

Id. at 16. The inventor argued that Darlington did not need a cable positioner above the shooting axis to bias the cable segment away because in Darlington's shoot-through embodiment the native position of the cables avoided the shooting axis. *Id.* at 18. Thus, Darlington did not "disclose or suggest lateral biasing of a cable positioned above the shooting axis." *Id*. at 20. The claims as amended were allowed and the '665 patent issued.

The court is not persuaded that during prosecution of the '665 patent the inventor disclaimed any scope within the plain meaning of the language of claim 12. The inventor argued that Darlington did not disclose or suggest a cable positioner above the shooting axis that biased the power cables away from the shooting axis. The inventor overcame the examiner's rejection by adding that limitation to the amended claim. The inventor did not express any intent to exclude from claim 12 a crossbow with power cables "naturally" positioned to stand away from the shooting axis.

The court accepts Ravin's proposal that "arranged to bias the first cable segment away from the shooting axis" means "designed to" or "configured to" bias the cable away from the shooting axis, and not merely capable of doing so. But the court rejects Ravin's proposal that the limitation is not met if the native positioning of the power cables would make it

unnecessary to bias the power cables away from the shooting to clear a path for the arrow. That's not part of the claim language.[6]

The question for the infringement analysis is therefore simply whether the R500 has a cable positioner that biases the power cable away from the shooting axis. As the photographs above show, there is no dispute that the R500 has a first cable positioner above the shooting axis that biases a cable segment away from the shooting axis. Ravin does not contest any other limitation of claim 12. The court concludes that Ravin is not entitled to summary judgment of noninfringement of claim 12 of the '665 patent.[7]

3. Conclusion

The court will grant Ravin's motion for summary judgment on the asserted claims of the '375 patent and the '757 patent because the R500 does not meet the "extending between" limitation. The court will deny Ravin's motion for summary judgment on claim 1 and claim 12 of the '665 patent because the R500 includes a cable positioner that biases the top power cable away from the shooting axis.

---

[6] Ravin suggests that because claim 12 uses the phrase "arranged to bias," it must mean something different than "bias," which is used in the other claims. But Ravin's claim differentiation argument does not change the court's conclusion. "Under the doctrine of claim differentiation, it is presumed that different words used in different claims result in a difference in meaning and scope for each of the claims." *Clearstream Wastewater Sys., Inc. v. Hydro-Action, Inc.*, 206 F.3d 1440, 1446 (Fed. Cir. 2000). But the doctrine is not a "hard and fast rule of construction," and it can be overcome when, as here, the intrinsic and extrinsic evidence dictates a contrary conclusion. *Seachange Int'l, Inc. v. C-COR, Inc.*, 413 F.3d 1361, 1368 (Fed. Cir. 2005); *Apple, Inc. v. Smart Mobile Techs. LLC*, No. 2024-1352, 2026 WL 160563, at *6 (Fed. Cir. Jan. 21, 2026).

[7] MCP moves for summary judgment that claim 10 of the '665 patent indefinite, because the problem is a minor clerical error, correctable with a certificate of correction. Dkt. 82, at 87–88. Ravin has withdrawn its assertion that claim 10 is indefinite. Dkt. 93, at 82. So the will grant MCP's motion on this point as unopposed.

Ravin also moves for summary judgment of noninfringement of the asserted dependent claims of the ’665 patent. The court infers that Ravin concedes that the R500 meets the limitations in the asserted dependent claims of the ’665 patent. The court will order Ravin to show cause why the court should not grant summary judgment to MCP on the infringement of all the asserted claims of the ’665 patent.

E. ’220 patent

1. Introduction

The ’220 patent discloses and claims a compound archery bow configured so that the cams move forward as the bow is drawn. The invention’s purported advantage is to allow the bow to store more energy in the crossbow’s bent limbs. ’220 patent, 3:29–32. An embodiment is shown below:

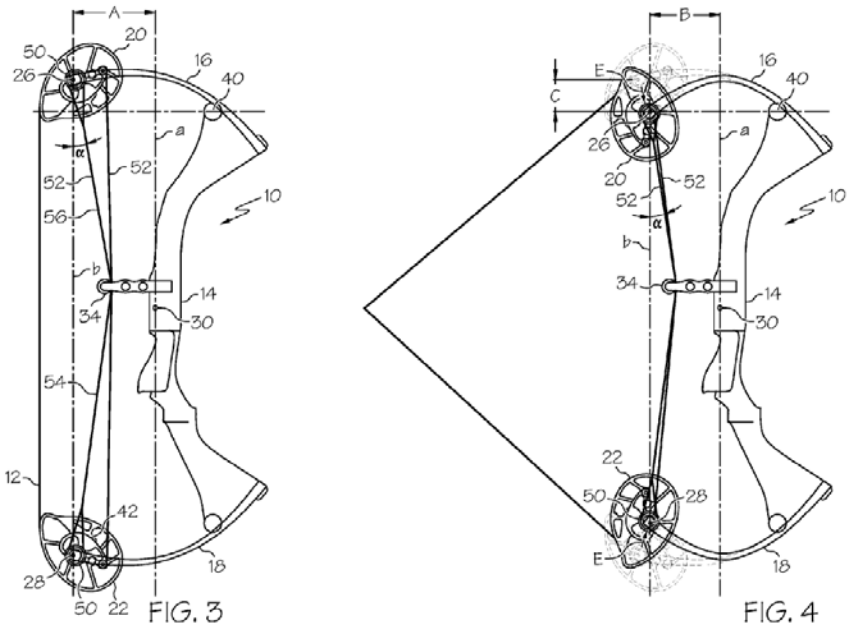

’220 patent, Figures 3 and 4. The drawing on the left shows the bow in the undrawn, or brace, position; the drawing on the right shows the bow in the drawn position. The ’220 patent describes the invention in relation to two planes: a plane extending through a point on the riser

(reference letter a; not reference letters A or α) and a reference plane between the axis of rotation of the rotatable members (reference letter b; not reference letter B). In the undrawn position, the distance between the planes (the distance represented by reference letter A) is greater than it is in the drawn position (the distance represented by reference letter B).

Claim 1 is the first independent claim of the '220 patent. With the pertinent claim terms in bold, it reads:

> A compound **archery bow** having a brace condition and a drawn condition, the bow comprising:
>
> a riser supporting a first limb and a second limb, the riser defining a predetermined location;
>
> the first limb supporting a first rotatable member, the first rotatable member defining a first axis of rotation;
>
> the second limb supporting a second rotatable member, the second rotatable member defining a second axis of rotation;
>
> **a cable guard attached to said riser** and a power cable extending between said first rotatable member and said second rotatable member, said cable guard biasing said power cable in a lateral direction;
>
> the first axis of rotation and the second axis of rotation moving with respect to one another as the bow is drawn from the brace condition to the drawn condition;
>
> wherein the bow defines a reference plane that includes the first axis of rotation and the second axis of rotation, and **the reference plane continually traverses toward the predetermined location as the bow is drawn from the brace condition to the drawn condition**.

'220 patent, 6:25–45 (emphasis added). Claim 10 is the second independent claim. It is substantially similar to claim 1, except that it claims a different movement of the two planes. Here is the relevant part of claim 10 with the pertinent claim terms in bold:

> wherein the bow defines a reference plane that includes the first axis of rotation and the second axis of rotation, and **the reference**

> **plane moves toward the predetermined location as the bow is initially drawn from the brace condition**.

'220 patent, 6:64–7:14 (emphasis added). Claim 1 requires that the reference plane move toward the riser continuously throughout drawing; claim 10 requires that the reference plane move toward the riser only at the initiation of drawing.

2. Infringement

Ravin moves for summary judgment of noninfringement of all the asserted claims in the '220 patent.[8] The court addresses only the independent claims (claim 1 and claim 10) because those are sufficient to resolve the infringement questions.[9] Ravin makes three arguments for noninfringement. First, the '220 patent covers only archery bows, not crossbows. Second, in the R500, the reference plane does not move forward continuously throughout the drawing of the bow or only at the initiation of drawing. Third, the cable guard is not attached to the riser.

Ravin's first argument fails because a person of skill in the art of archery would understand that the principles applicable to compound archery bows can readily be applied to compound crossbows. Archery bows are cited as prior art in the patents-in-suit. Ravin points to nothing in the '220 patent or its prosecution history that disavows the inventor's intent to claim the invention as used in crossbows.

Ravin argues that the preamble of the independent claims, which recites an "archery bow," limits the claims to vertically held archery bows. "In general, a preamble limits the

---

[8] Ravin also moves for summary judgment that claims 1 and 10 are invalid under 35 U.S.C. § 112 for lack of written description. MCP moves for summary judgment that the '220 patent is not invalid under § 112. Because the court concludes that the R500 does not infringe any claim of the '220 patent, it will not reach the invalidity issues.

[9] The asserted dependent claims are claims 5, 6, 8, 9, 11, 12, 13, 14, 15, 18, and 19.

invention if it recites essential structure or steps, or if it is 'necessary to give life, meaning, and vitality' to the claim. *Catalina Mktg. Int'l, Inc. v. Coolsavings.com, Inc.*, 289 F.3d 801, 808 (Fed. Cir. 2002) (citation omitted). But a preamble is not limiting if the claim body recites a structurally complete invention, and the preamble is used only to state the purpose or intended use of the invention. *Id*. Ravin cites no evidentiary support for its argument that the preamble is limiting, relying only on attorney argument. The court is not persuaded. The body of the independent claims recite a structurally complete invention. And even if the concept "archery bow" does not include crossbows, the recitation of "archery bow" in the preamble is at most an intended use of the invention.

Ravin's second argument fails because Ravin fails to establish that in the R500 the movement of the reference plane relative to the riser is undisputed. The parties agree that once the bow is fully drawn, the reference plane is closer to the riser than when the bow is undrawn. But Ravin hasn't established how the reference plane moves. According to Ravin's expert, Duffner, in the R500, the reference plane moves *away* from the riser at the beginning of the drawing of the bow. Dkt. 69, ¶¶ 270–77. Duffner reaches this conclusion for two reasons. First, he points to his analysis of the configuration of the limbs of the bow. He posits that the limbs bend in a circular arc, with the center of the circle at the point where the limb contacts the riser. *Id*., ¶ 272. But the limbs do not pivot like a simple beam, with the cam end of the limb moving in a circle about a fixed fulcrum. Rather, the limbs flex all along their length, which would affect the path of the cam's axis of rotation. Duffner hasn't accounted for that.

Second, Duffner purports to have confirmed his hypothesis with actual testing documented on video. Dkt. 110-1 (placeholder for video). Ravin includes two images captured from the video in its brief. Dkt. 78, at 66. MCP disputes the validity of Duffner's test,

contending that the two images were taken from different positions. Dkt. 98, at 71–72. MCP's argument is misguided, because it relies solely on the cropping of the two still images from the video. The video itself plainly shows that the camera was in a fixed position during the recording. The real problem with Duffner's test is that crossbow was not securely held. The crossbow itself wobbles visibly while it is being drawn. The movement of the reference plane toward the riser is slight in any case, particularly at the beginning of the draw, so the wobbling makes it impossible to draw conclusions about the movement of the cams relative to the stock and riser of the crossbow. The court concludes that whether the movement of the reference plane meets the requirements of the claims is disputed.

Ravin's third argument, however, is decisive. Ravin contends that the cable guard is not attached to the riser, as required in both independent claims. MCP identifies the cable guard as located in a cutout of the finger guard that runs above the stock. The cable guard is designated as with reference number 10 in the following photo from MCP's infringement chart:

Dkt. 74, Ex. 11, at 6, 17. The riser is identified with reference number 2. MCP's expert, Paulus, provides no analysis of the connection between the cable guard and the riser: he simply states that one is connected to the other: "As shown below and in the attached infringement charts, the accused Ravin crossbows have a cable guard [10] that is attached to a riser or prod [2]." Dkt. 74, at 49. By contrast, Ravin's expert, Duffner, persuasively shows that the cable guard is not directly connected to the riser, using detailed annotations demonstrating that the two parts are distinct components. *See* Dkt. 69, ¶¶ 260–64.

The controversy is really a dispute about the construction of the term "attached to said riser," for which neither party proposed a claim construction. MCP's implicit construction is, essentially, that everything on a crossbow is connected to everything else. That would render the claim element meaningless, and the court declines to adopt it. *Bicon, Inc. v. Straumann Co.*, 441 F.3d 945, 950 (Fed. Cir. 2006) ("[C]laims are interpreted with an eye toward giving effect to all terms in the claim."). Ravin's implied construction is consistent with the ordinary and customary meaning of the word "attached." Because the intrinsic evidence provides little guidance about the meaning of the term, general purpose dictionaries are a helpful point of reference The *Oxford English Dictionary* defines the term as "[j]oined or connected physically."[10] *Merriam-Webster* defines the term as "connected or joined to something."[11] The *American Heritage Dictionary* defines the verb "attach" as "[t]o fasten, secure, or join."[12] The key to all

[10] *Attached*, *Oxford-English Dictionary*, https://www.oed.com/dictionary/attached (last visited June 5, 2025).

[11] *Attached*, *Merriam-Webster*, https://www.merriam-webster.com/dictionary/attached (last visited June 5, 2025).

[12] *Attach*, *American Heritage Dictionary*, https://www.ahdictionary.com/word/search.html?q=attach (last visited June 5, 2025).

these definitions is that the object that is "attached" is physically joined to another object. Nothing in the claim language or specification of the '220 patent suggests that the term means anything other than the commonly understood definition of the word.

The court concludes that the cable guard of the R500 is not "attached to" the riser because the two parts aren't physically joined. Thus, the R500 doesn't infringe either claim 1 or claim 10 of the '220 patent. The court will grant Ravin's summary judgment motion as to the asserted claims of the '220 patent.

Nothing in Ravin's complaint or any of the parties' briefing suggests that Ravin faces any risk of future prosecution under the '220 patent, so there is no need for the court consider its validity. "A district court judge faced with an invalidity counterclaim challenging a patent that it concludes was not infringed may either hear the claim or dismiss it without prejudice." *Flexuspine, Inc. v. Globus Med., Inc.*, 879 F.3d 1369, 1376 (Fed. Cir. 2018) (quoting *Liquid Dynamics Corp. v. Vaughan Co., Inc.*, 355 F.3d 1361, 1370 (Fed. Cir. 2004) (alteration in original)). The court will dismiss Ravin's invalidity affirmative defense concerning the '220 patent without prejudice.

F. Cable slide patents (the '433 patent and '939 patent)

1. Introduction

The '433 patent and '939 patent disclose and claim a crossbow with a sliding cable positioner that moves the power cables relative to the shooting axis as the bow is drawn. The purported advantage of the invention is to minimize limb torsion and cam lean when the bow is in the drawn position, which is when the forces acting on the cams and limbs are at their greatest.'433 patent, 1:41–47.

An embodiment is shown in the following drawing:

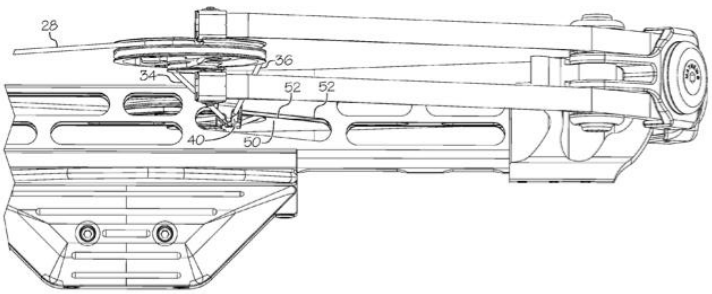

FIG. 5

’433 patent, Figure 5. The power cables (reference numbers 36 and 34) are routed through a cable positioner (reference number 40). The cable positioner is located in a slot-shaped aperture (reference number 50) in the stock. As the crossbow is drawn, the cables and cable positioner move within the aperture. Given the orientation of the aperture, the cable positioner, and thus the power cables, move toward the shooting axis as the bow is drawn.

Claim 8 of the ’433 patent is a representative independent claim:

> A crossbow having a first draw orientation and a second draw orientation, the crossbow comprising:
>
> a stock defining a shooting axis;
>
> a bow portion comprising a bowstring and a cable;
>
> a cable positioner arranged to bias said cable in a direction lateral to the shooting axis;
>
> wherein the crossbow defines a distance between the shooting axis and the cable, the distance in the first draw orientation being different from the distance in the second draw orientation.

'433 patent, 6:5–13. The '939 patent is a continuation of the application that led to the '433 patent, and thus they share a common specification. MCP asserts all the independent claims and multiple dependent claims in the cable slide patents.[13]

2. Infringement

Both parties move for summary judgment on MCP's claim that the accused products infringe the asserted claims of the cable slide patents. The parties address only the independent claims, which are sufficient to resolve the infringement issues. Ravin makes two noninfringement arguments for the cable slide patents. First, Ravin argues that neither the cable positioner nor the stock of the R500 is "arranged to bias" the power cables as required by claims 1 and 8 of the '433 patent and by claims 1 and 11 of the '939 patent. Second, Ravin argues that any biasing of the power cables of the R500 is not accomplished by the "surface of the aperture," as required by independent claim 14 of the '433 patent.

a. The "arranged to bias" limitation

Ravin's first noninfringement argument mirrors the argument it made about the term "arranged to," as used in claim 12 of the '665 patent. Ravin contends that the natural positioning of the power cables, running from the cam on one side to an anchor attached to a limb on the opposite side, keeps the power cables away from the path of the arrow. Thus, because there is no need to bias the power cables away from the shooting axis, the cable positioner is not "arranged to" bias the power cables, in the sense that biasing was not the purpose of the design. The same argument is made with respect to "the stock arranged to bias said cable away from the shooting axis," as required by claim 11 of the '939 patent.

[13] MCP asserts claims 1–4, 6, 8, 9, 11, 12, and 14–20 of the '433 patent. It asserts claims 1–9, and 11–18 of the '939 patent.

The court rejects Ravin's argument for the same reason that it rejected it in the context of claim 12 of the '665 patent. The purpose of the inventor is irrelevant. The sole question is whether the cable positioner (or the stock) biases the power cables away from the shooting axis. There is no genuine dispute about that.

Ravin does not contest MCP's contention that the R500 meets all the other claim limitations of claims 1 and 8 of the '433 patent and the asserted claims dependent from them. The court will grant summary judgment to MCP on its claim that the R500 infringes claims 1–4, 6, 8, 9, 11, and 12 of the '433 patent. As for the '939 patent, the court's decision about the "arranged to bias" limitation resolves the infringement issue in MCP's favor. The court would grant summary judgment to MCP on its claim that the R500 infringes the asserted claims of the '939 patent. But there is a remaining issue: whether the '939 patent's "shortest distance" limitations are invalid because they are indefinite. The court will address that dispute in the validity section below.

b. The "surface of the aperture" limitation

Ravins' second noninfringement argument pertains to independent claim 14 of the '433 patent. The biasing concept in that that claim is phrased as follows:

> wherein a **surface of the aperture biases the cable** in a direction lateral to the shooting axis, at least a portion of the surface oriented non-parallel to the shooting axis.

'433 patent, 6:31–33 (emphasis added).

Ravin's argument in its summary judgment brief is a single, short paragraph. Ravin contends that, even assuming there is some biasing of the cables, it's not the surface of the aperture that does it. Dkt. 78, at 52. But drilling down to the cited evidence provides no support for Ravin's contention. Ravin cites its proposed fact ¶ 208, which in turn cites

Duffner's report, Dkt. 69 at 163–67. Duffner supports his position with a quotation of passages from the specification of the '433 patent:

> "[I]n some embodiments, the cables 34, 36 bias the cable positioner 40 against an upper surface of the slot 50" while "[i]n some embodiments, a surface 52 of the slot 50 biases and displaces the cable(s) 34, 36 away from the shooting axis." *See* '433 Patent, at 3:21–29.

Dkt. 69, ¶ 164. The passages that Duffner cites describe Figures 1 and 2 of the '433 patent. In the embodiment shown in those figures, the cables pass through a cable positioner located in a slot-shaped aperture:

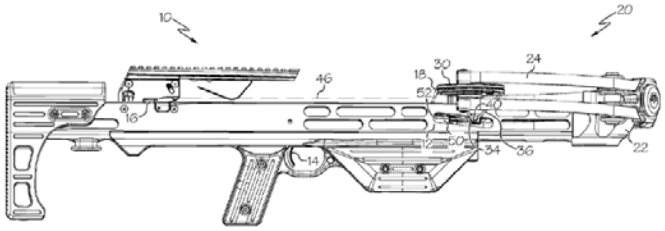

FIG. 1

'433 patent, Figure 1.

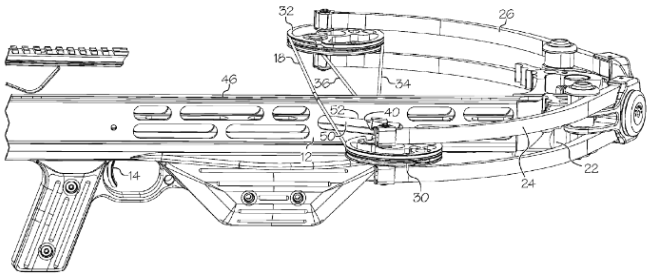

FIG. 2

'433 patent, Figure 2. Duffner points to nothing in the specification that shows the inventor's intent that the power cables would directly contact the aperture without a cable positioner. Ravin's brief also repeats its argument that the R500 does not bias the power cables because the cam-to-limb configuration of the cables in the R500 naturally hold the cables away from the shooting axis.

There's no genuine dispute about the configuration and operation of the R500. *See* Dkt. 74, ¶ 124 (photo). The R500's power cables are biased away from the shooting axis as shown above. As the bow is drawn, the cable positioners move forward within the aperture. The tension of the power cables holds the cable positioner against the surface of the aperture. And, given the orientation of the aperture, the power cables move relative to the shooting axis as the bow is drawn. Because the configuration of the aperture determines the extent of the biasing away from the shooting axis, it's accurate to say that in the R500, the surface of the aperture biases the power cable in a direction lateral to the shooting axis.

The undisputed evidence shows that the R500 meets all the limitations of independent claim 14 of the '433 patent. Ravin does not contest MCP's contention that the R500 meets all the other limitations of the asserted claims that depend from claim 14 of the '433 patent. So the court will grant summary judgment to MCP on its claim that the R500 infringes claims 14, 15, 16, 17, 18, 19, and 20 of the '433 patent.

3. Validity

Ravin raises two invalidity arguments against the cable slide patents. First, Ravin contends that the asserted claims of the '939 patent are invalid because the claim term "shortest distance" is indefinite. Second, Ravin contends that the claims of the '433 and '939 patents are invalid as obvious in light of U.S. Patent Application No. 2012/0006311 to Bednar, or a combination of Bednar with Korean Patent No. KR86000180 to Kang. MCP moves for summary judgment on both of Ravin's issues.

a. Definiteness

The definiteness requirement for patent claims is in paragraph (b) of section 112 of the Patent Act. It states:

> The specification shall conclude with one or more claims particularly pointing out and distinctly claiming the subject matter which the inventor or a joint inventor regards as the invention.

35 U.S.C. § 112(b). The purpose of this requirement is to provide adequate public notice of the scope of the inventor's rights. "[A] patent is invalid for indefiniteness if its claims, read in light of the specification delineating the patent, and the prosecution history, fail to inform, with reasonable certainty, those skilled in the art about the scope of the invention." *Nautilus, Inc. v. Biosig Instruments, Inc.*, 572 U.S. 898, 901 (2014). Whether a claim is indefinite is a question of law for the court. *Teva Pharm. USA, Inc. v. Sandoz, Inc.*, 789 F.3d 1335, 1341 (Fed. Cir. 2015).

Independent claims 1 and 11 of the '939 patent claim the cable slide invention in terms of the distance between the power cables and the shooting axis. For example, claim 1, with the pertinent claim language in bold and the subparagraphs labeled for reference, reads:

> A crossbow comprising:
>
> [a] a stock defining a shooting axis;
>
> [b] a bow portion comprising a first limb supporting a first rotatable member, a second limb supporting a second rotatable member, a bowstring extending between the first and second rotatable members, and a cable arranged to be taken up on the first rotatable member; and
>
> [c] a cable positioner arranged to bias said cable away from the shooting axis, **said cable separated from said shooting axis by a shortest distance as measured perpendicular to the shooting axis**;
>
> [d] the crossbow having a first draw orientation and a second draw orientation, **the shortest distance being greater in the first draw orientation than in the second draw orientation**.

'939 patent, 5:32–47 (emphasis added). The pertinent language in claim 11 is the same.

Ravin contends that these claims are indefinite because the reference to "a shortest distance" in subparagraph c implies that the crossbow has but one "shortest distance," and the patent does not adequately explain how to measure the "shortest distance." Further, the argument goes, that makes the claim incomprehensible, because subparagraph d refers to two separate "shortest distances," contradicting the description of "shortest distance" in subparagraph c. Dkt. 78, at 48.

Ravin's reading of claims 1 and 11 is unreasonably obtuse. The court discerns no ambiguity in these claims. Read fairly and as a whole, a competent and reasonable reader (let alone a person skilled in the art of crossbow design) would understand that the shortest distance referred to in subparagraph c is simply the distance between the power cable and the shooting axis where they are closest. A reasonable reader would also understand that the "shortest distance" exists in a particular draw orientation, and that the purpose of the invention is to have that shortest distance change as the bow its drawn.

Any reasonable reader, and certainly a person of skill in the art of crossbow design, would understand the meaning of "shortest distance" as that concept is used in claims 1 and 11 of the '939 patent. Thus the scope of the claims is reasonably clear. The court will deny Ravin's motion for summary judgment on the issue of invalidity based on indefiniteness and grant summary judgment in MCP's favor.

b. Obviousness

Ravin's second invalidity argument is that the claims of the cable slide patents are invalid as obvious in light of U.S. Patent Application No. 2012/0006311 to Bednar, or in light of the combination of Bednar with Korean Patent No. KR86000180 to Kang.

Obviousness is a legal conclusion based on underlying facts, including what are known as the *Graham* factors: "the scope and content of the prior art, the differences between the prior art and the claimed invention, the level of ordinary skill in the art, and any relevant secondary considerations." *Allergan, Inc. v. Sandoz, Inc.*, 726 F.3d 1286, 1290–91 (Fed. Cir. 2013) (citing *Graham v. John Deere Co.*, 383 U.S. 1 (1966)). The issue is amenable to summary judgment if the material facts are not genuinely disputed. To survive MCP's motion for summary judgment, Ravin must adduce evidence that would allow a reasonable jury to find "by clear and convincing evidence that a skilled artisan would have been motivated to combine the teachings of the prior art references to achieve the claimed invention, and that the skilled artisan would have had a reasonable expectation of success from doing so." *Bristol-Myers Squibb Co. v. Teva Pharm. USA, Inc.*, 752 F.3d 967, 973 (Fed. Cir. 2014).

The court begins with a review of the *Graham* factors, which are mostly not disputed. MCP has adduced no evidence of secondary considerations, so that's not a factor here. The parties do not dispute the level of skill in the art, which is, essentially, a person with a degree in mechanical engineering (or a related field) and a few years of relevant design experience. The parties agree that the pertinent prior art is limited to the Bednar and Kang references. Dkt. 84, Ex. 30; Dkt. 84-31.

The content of the prior art is not genuinely disputed. The parties agree that Bednar discloses all the claimed elements of the cable slide patent except for the nonparallel aperture for the cable positioner. Bednar teaches a vibration suppressor for the power cables of a compound crossbow. Dkt. 84, Ex. 30. The following figure is an embodiment disclosed in Bednar:

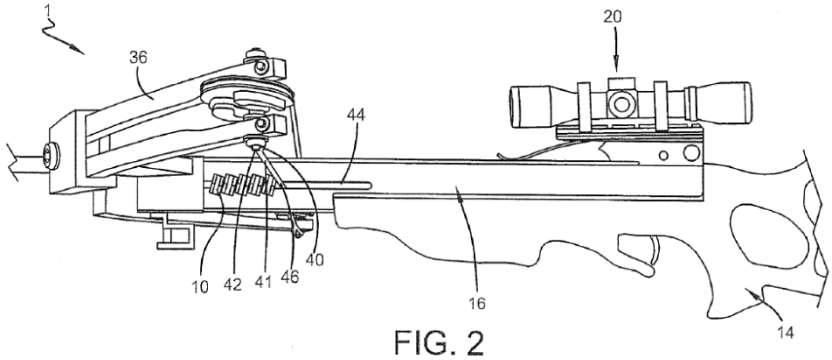

FIG. 2

Id. at 4. The cable damper (reference number 10) sits in a slot through which the power cables pass (reference number 44). The slot is below the shooting axis and parallel to it.

Kang teaches a crossbow with no power cables, but with a complex bowstring arrangement. The bowstring extends from a fixed point along the first limb, then to a roller at the end of the second limb, then to a roller at the end of the first limb, and finally to a matching fixed point along the second limb. Kang refers to the portion of the bow string between the fixed positions and the roller as the "secondary bow string." The configuration is shown in this figure:

FIG.1

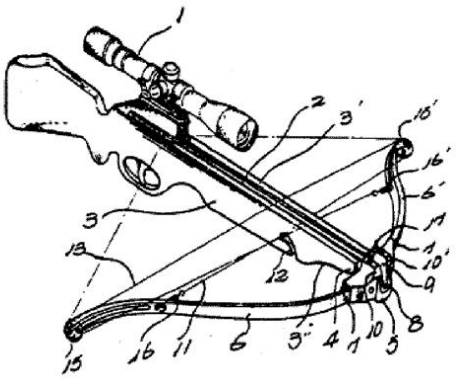

Dkt. 84, Ex. 31, at 4. Kang is pertinent here because the secondary bow string runs through an "insertion groove" (reference number 12) in the stock, which keeps the secondary bow string from interfering with the flight of the arrow. Ravin, and its expert Duffner, contend that the insertion groove is a "cable slot 12 that is non-parallel to the shooting axis." Dkt. 75, ¶ 314. But Kang does not provide the element missing from Bednar, which Duffner identifies as "a non-parallel travel path for its cable positioner." *Id.*, ¶ 261. Kang does not teach that the secondary bow string moves within the insertion groove. Despite Ravin's and Duffner's contention that Bednar combined with Kang disclose all the elements of the cable slide patents, it is not genuinely disputed that Kang does not disclose a nonparallel travel path for the power cables of a compound bow.

The parties' main dispute is whether Duffner has provided a well-grounded explanation for why a person of skill in the art would have been motivated to modify Bednar to add a nonparallel travel path for its cable positioner.

Duffner's analysis of the motivation to modify Bednar to add a nonparallel cable slot or combine it with the angled slot of Kang is contained in three paragraphs. The court quotes those paragraphs in full below:

> A POSITA would have recognized that a non-parallel cable slot would have reduced the amount of downward force on the cables at the higher end of the slot, closer to the shooting axis. This reduced force would have increased the lifespan of the cams and cables and would have reduced the likelihood of a catastrophic failure of one or more crossbow components. A POSITA, thus, would have found it obvious to modify Bednar's cable slot to have an orientation which was non-parallel to the shooting axis in the interests of safety and longevity provided by the resulting reduced strain, motivating the modification.
>
> Further, a POSITA would have recognized that regular maintenance, such as applying wax to the moving strings, would have necessitated regular removal of the cable slide from the slot.

> A slanted slot would have made it easier to remove and reinsert the cable slide (or insert it the first time, during initial crossbow assembly) improving the desirability and ultimately safety of the crossbow by removing a potential barrier to regular maintenance. For these reasons, a POSITA would have found it obvious, based on Bednar alone, to modify the crossbow to have a non-parallel slot, which would have resulted in at least a portion of the travel path being non-parallel to the shooting axis as claimed. Modification would have only required changing the angle of the slot already present in the crossbow of Bednar, well within the skill level of a POSITA prior to the '433 Patent, and would have produced the predictable result of a crossbow with a slanted cable slot, leading a POSITA to a reasonable expectation of success for the modification.
>
> . . . .
>
> POSITA would have been motivated, having reviewed *Kang*, to modify the crossbow of *Bednar* to have a non-parallel cable slot (and thus a travel path for the cables passing through the slot that is non-parallel with the shooting axis) for the reasons explained above regarding improved longevity of crossbow components due to reduced strain and ease of insertion and removal of the cable slide. A POSITA would have been able to combine *Bednar* and *Kang* with a reasonable expectation of success for the combination for those reasons as well.

Dkt. 75, ¶¶ 276–77, 279 (addressing the '433 patent); *see also* ¶¶ 312–13, 315 (addressing the '939 patent). To put it simply, Duffner's opinion is that a person of skill in the art would have been motivated to modify Bednar's slot to be nonparallel to the shooting axis (1) to reduce the amount of downward force on the cables when the crossbow is drawn to prolong the lifespan of the cams and cables; and (2) to make it easier to remove the cable slide from the slot.

The problem with Duffner's explanation is that there is nothing in Bednar or Kang expressing any concern with downward force on the cams, prolonging the life of the crossbow, or the ease of removing the cable slide. Bednar's discussion of cable forces, which Duffner quotes, concerns only the lateral forces on the limbs pulling them inward toward the stock. Dkt. 75, ¶ 268 (quoting Dkt. 84, Ex. 30, ¶ 35). "[O]bviousness concerns whether a skilled

artisan not only *could have made* but *would have been motivated to make* the combinations or modifications of prior art to arrive at the claimed invention." *Belden Inc. v. Berk-Tek LLC*, 805 F.3d 1064, 1073 (Fed. Cir. 2015) (emphasis in original). Expert testimony that a person of ordinary skill in the art would be motivated to combine references is insufficient to support a determination of obviousness if it offers nothing more than hindsight bias to explain "why a person of ordinary skill in the art would have combined elements from specific references in the way the claimed invention does." *ActiveVideo Networks, Inc. v. Verizon Commc'ns, Inc.*, 694 F.3d 1312, 1328 (Fed. Cir. 2012). Duffner does not explain why a skilled artisan, reading Bednar and Kang, would have been concerned about downward force on the limbs or cams. The benefits of a nonparallel aperture are those found in the specification of MCP's cable slide patents. Duffner's explanation is incorrect that the Bednar/Kang combination discloses all the elements of the cable slide patents. His analysis is fatally plagued by hindsight bias.

The court concludes that Duffner's expert testimony is insufficient to create a genuine factual dispute as to whether the cable slide patents are obvious. The court will deny Ravin's motion for summary judgment on the issue of invalidity based on obviousness and grant summary judgment in MCP's favor.

4. Conclusion

The court will grant MCP's motion for summary judgment of infringement for the asserted claims of the '433 and '939 patents as well as MCP's motion for summary judgment on Ravin's invalidity counterclaims concerning these patents. The only remaining issue for the cable slide patents is damages.

G. Stock overlap patents (the ’893 patent and the ’056 patent)

1. Introduction

The court will refer to the ’893 and ’056 patents as the “stock overlap” patents. The stock overlap patents disclose and claim a crossbow in which the cams overlap the stock when the bow is drawn. The benefit of the overlap arrangement is that it allows the crossbow to be narrower. The ’056 patent is a continuation of the ’893 patent and thus the two patents share a common specification.

An embodiment is shown in the following figure:

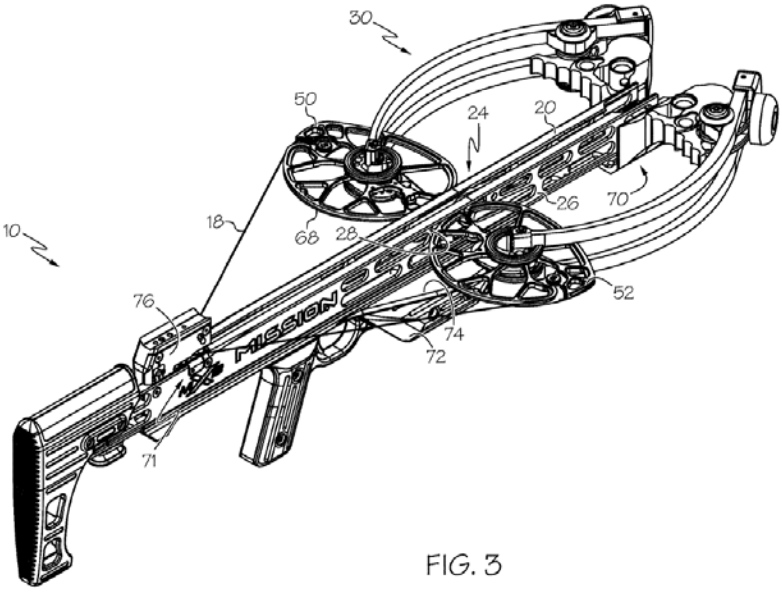

FIG. 3

’893 patent, Figure 3. This figure shows the crossbow in the drawn position, with the bowstring (reference number 18) engaged in the latch at the back of the crossbow. The cams (reference numbers 50 and 52) have been pulled toward the shooting axis, and part of the cam crosses the sidewall of the stock (reference number 26).

Claim 1 of the '893 patent is a representative independent claim. With the pertinent claim language in bold, it reads:

> A crossbow comprising:
>
> a stock comprising a structural portion;
>
> a fire control assembly attached to the stock;
>
> a bow portion attached to the stock, the bow portion comprising a prod, a first limb, a second limb, a bowstring segment, a first rotatable member and a second rotatable member, the bowstring segment arranged to unspool from the first rotatable member and the second rotatable member as the crossbow is drawn;
>
> the crossbow comprising a drawn orientation wherein **the first rotatable member overlaps with the structural portion of the stock** and **a portion of the first rotatable member passes through a sidewall of the stock**.

'893 patent, 5:9–21 (emphasis added).

The concept of the "stock" is central to the stock overlap patents. The parties propose slightly different constructions, but they do not dispute the fundamental concept. MCP contends that the stock is "a supporting framework or structure." Dkt. 62-1 at 2. Ravin contends that the stock is "the central component of the crossbow to which everything else attaches." *Id*. MCP's proposed construction captures the concept that the stock is a *structural* component; Ravin's construction captures the concept that other components are attached to it. The court will define the term "stock" to mean "the central structural component of the crossbow." As explained below, the court's construction of "stock" does not resolve the infringement issues posed by the parties.

2. Non-infringement

Ravin moves for summary judgment of noninfringement of most of the asserted claims in the '893 patent and the '056 patent.[14] Ravin makes two noninfringement arguments: (1) the independent claims require that the *entirety* of the cams overlap the stock; and (2) the cams of the R500 do not pass through the sidewall of the stock, so it does not infringe claims 1 and 11 of the '893 patent or dependent claims 5, 6, 14, and 15 of the '056 patent. The parties raise minor validity issues that the court addresses in a separate section below.

Taking claim 1 of the '893 patent as an example, the last subparagraph contains two limitations. First, the rotatable member must *overlap* the structural portion of the stock. And second, a portion of the rotatable member must *pass through* the sidewall of the stock.

a. The "overlap" limitation

Ravin contends that claims 1 and 11 of the '893 patent and claim 1 of the '056 patent require that *the entire* rotatable member overlaps the structural portion of the stock. Ravin's contention is a variation on the doctrine of claim differentiation, which the court previously discussed in footnote 6, *supra*. Ravin argues that the inventor specified that only *a portion of* the rotatable member must pass through the sidewall of the stock for the "pass through" limitation. But for the "overlap" limitation, the inventor did *not* specify that only a portion of the rotatable member must overlap the stock. As Ravin puts it, "because the patentee chose to distinguish between 'the first rotatable member' and 'a portion of' the rotatable member, the express

[14] Ravin moves for summary judgment of noninfringement of claims 1–6, 8–17, and 19 of the '893 patent. Ravin moves for summary judgment of noninfringement of claims 1–7, 9–11, 14 and 15 of the '056 patent; it does not move for noninfringement as to independent claim 12 or dependent claims 13 and 16 of the '056 patent, which MCP is asserting against Ravin.

language of the claims requires that ***the entire*** rotatable member overlap with the structural portion of the stock." Dkt. 78, at 55. This argument fails for two reasons.

First, the word "overlap" itself suggests partial coverage. The *Oxford English Dictionary* defines the term as "To lie or be situated so as to extend over part of (a thing); to overlie (something) partially."[15] *Merriam-Webster* defines the term as "to extend over or past and cover a part of."[16] The *American Heritage Dictionary* defines the verb "overlap" as "[t]o lie or extend over and cover part of."[17] Because the term "overlap" by definition describes a relationship in which one object is only partially covering another, the phrase "the rotatable member overlaps with" means "*at least a portion of* the rotatable member overlaps with."

Second, Ravin's construction of the claim would exclude every embodiment of the patent disclosed in the specification. It's well established that a claim construction that excludes the preferred embodiment is rarely, if ever, correct. *CUPP Computing AS v. Trend Micro Inc.*, 53 F.4th 1376, 1381 (Fed. Cir. 2022). Ravin invokes the counter principle that if "claims are susceptible to only one reasonable interpretation and that interpretation results in a nonsensical construction of the claim as a whole, the claim must be invalidated." *Chef Am., Inc. v. Lamb-Weston, Inc.*, 358 F.3d 1371, 1374 (Fed. Cir. 2004). But that principle has no application here, because the independent claims are amenable to a reasonable interpretation

---

[15] *Overlap*, *Oxford-English Dictionary*, https://www.oed.com/dictionary/overlap (last visited June 5, 2025).

[16] *Overlap*, *Merriam-Webster*, https://www.merriam-webster.com/dictionary/overlap (last visited June 5, 2025).

[17] *Overlap*, *American Heritage Dictionary*, https://www.ahdictionary.com/word/search.html?q=overlap (last visited June 5, 2025).

that covers the disclosed embodiments. The claims of the stock overlap patents are not unreasonable; Ravin's proposed construction is.[18]

Ravin does not dispute that a portion of the cams of the R500 overlap the stock when the crossbow is drawn. Ravin is not entitled to summary judgment of noninfringement based on the overlap limitation.

b. "Pass through" limitation

Ravin contends that the R500 does not meet the "pass through" limitation of claims 1 and 11 of the '893 patent and claims 5, 6, 14, and 15 of the '056 patent. The operation of the accused product is not disputed, and for the purposes of the "pass through" limitation, it is best seen in a video of the R500 being drawn. Dkt. 91, Ex. 3. The video shows that the cams of the R500 pass through a gap in the component that Ravin's expert Duffner refers to as the "finger guard" or "picatinny rail." This component is not part of the stock under either party's claim construction. MCP's expert, Paulus, states that the cams pass through the sidewall of the stock, Dkt. 74, ¶ 142, but that statement is merely conclusory. Paulus says the videos are "very informative," but he does not acknowledge that the cams pass through the finger guard. And he makes no effort to explain how this component is part of the stock.

The court concludes that there is no genuine dispute that the R500 does not meet the "pass through" limitation of the '893 and '056 patents. Accordingly, the court will grant summary judgment of noninfringement to Ravin on claims 1 and 11 of the '893 patent (and the asserted claims that depend from them) and on claims 5, 6, 14, and 15 of the '056 patent.

[18] Ravin's expert asserts that the '893 patent's file history supports his interpretation that the entire rotatable member must overlap with the structural portion of the stock. Dkt. 69, ¶¶ 202–05. The court reviewed the portions of the file history that Duffner cited, but it found no support for his interpretation.

3. Validity

Neither party moved for summary judgment on Ravin's counterclaim for invalidity for the stock overlap patents. Dkt. 63, ¶¶ 259–72.

MCP moves for summary judgment on Ravin's affirmative defense that the claims of the stock overlap patents lack adequate written description and are not enabled as required by § 112. Dkt. 82, at 92–94. Ravin's argument is based on its claim construction that the claims require the entire rotatable member to overlap the stock. Dkt. 93, at 86–89. The court has rejected Ravin's claim construction for reasons explained above, and thus, it will grant summary judgment to MCP on this point.

Ravin also raises an indefiniteness argument. Ravin contends that "MCP's inconsistent application and identification of the components it contends are the 'stock'" across the patents-in-suit makes the term indefinite under MCP's proposed construction. Dkt. 93, at 75. The parties' experts agree that the term "stock" is a commonly used term for a central component of a crossbow with which a person of skill in the art would be familiar. Dkt. 72, ¶ 104 (Paulus report stating "every crossbow has a stock"); (Dkt. 75, ¶ 67 (Duffner Report listing the stock as a basic element of a modern crossbow). The court discerns no ambiguity in the claim term "stock." The court will grant MCP's motion for summary judgment concerning Ravin's assertion that the term "stock" is indefinite.

4. Conclusion

The court grants Ravin's motion for summary judgment of noninfringement for all asserted claims of the '893 patent and claims 5, 6, 14, and 15 of the '056 patent (the claims that require a portion of the rotatable member to pass through a sidewall of the stock). Ravin doesn't explain why it is entitled to noninfringement on claims 2–4, 7, and 9–11 of the

'056 patent, all of which depend from claim 1. Ravin's sole argument is that claim 1 requires that *the entire* rotatable member overlaps the structural portion of the stock, an argument which the court rejected. The court understands Ravin to be conceding that the R500 meets the limitations in claims 2–4, 7, and 9–11 of the '056 patent. The court orders Ravin to show cause why the court should not grant summary judgment in MCP's favor on infringement of claim 1 of the '056 patent, as well as the asserted claims that depend from it.

Ravin did not move for summary judgment of noninfringement of claims 12, 13, and 16 of the '056 patent, which MCP asserts against Ravin. Dkt. 113, at 2, 4. Claim 12 is an independent claim. It reads:

> A crossbow comprising:
>
> a stock comprising a structural portion,
>
> a bow portion comprising a rotatable member arranged on a first limb to rotate about a rotation axis and a bowstring segment arranged to unspool from the rotatable member as the crossbow is drawn;
>
> wherein a reference line oriented parallel to the rotation axis intersects the rotatable member and the structural portion.

'056 patent, 6:14–22. Claims 13 and 16 depend from claim 12.

The court understands claim 12's limitation "wherein a reference line oriented parallel to the rotation axis intersects the rotatable member and the structural portion" to be the pertinent claim language. But that limitation is simply a variation of the "overlap" limitation discussed above, so the court would apply the same analysis and reach the same result: Ravin would not be entitled to summary judgment of noninfringement based on claim 12's limitation because a portion of the cams of the R500 overlap the stock when the crossbow is drawn.

Stated another way, if a reference line was oriented parallel to the rotation axis of the cam, that reference line would intersect the cam and the stock when the crossbow is drawn.

The court orders Ravin to show cause why the court should not grant summary judgment in MCP's favor on infringement of claim 12 of the '056 patent, as well as the asserted claims that depend from it.

H. Bull pup patent (the '435 patent)

1. Introduction

The '435 patent discloses and claims a compact crossbow that nevertheless maintains a long power stroke, which is the distance the bowstring is drawn. To achieve the objectives of compactness and power, the claimed crossbow locates the latch toward the rear of the crossbow in a cavity between the stock and an "extension member" that includes a cheek rest and a picatinny rail for mounting accessories.

An embodiment is shown in this drawing:

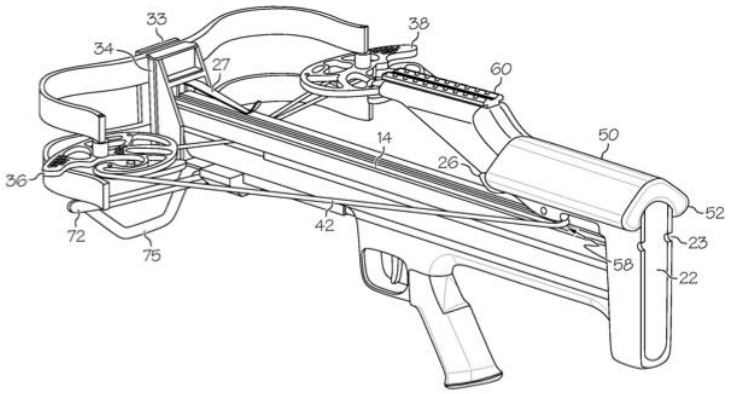

'435 patent, Figure 6. The extension member includes the picatinny rail (reference number 60) and the cheek rest (reference number 50). The latch is located in the cavity (reference number 58) between the extension member and the stock.

Claim 1 is the independent claim. With the pertinent claim language in bold, it reads:

> A crossbow comprising:
>
> a stock;
>
> a bow portion attached to the stock, the bow portion comprising at least one limb and a string;
>
> a latch configured to retain said string in a drawn condition;
>
> a trigger arranged to release said latch;
>
> a handgrip in proximity to the trigger;
>
> a butt located rearward of the latch, the butt spaced apart from the handgrip; and
>
> an extension member positioned above said stock, the extension member comprising a cheek rest and a picatinny rail, a height of the cheek rest above the stock being less than a height of the picatinny rail above the stock, **the cheek rest shaped differently from the picatinny rail**, the extension member and the stock defining a cavity, **the latch positioned in the cavity**.

'435 patent, 9:11–27 (emphasis added).

2. Infringement

Ravin moves for summary judgment of noninfringement of independent claim 1 and ten dependent claims of the '435 patent.[19] MCP asserts the '435 patent against three of Ravin's product lines: the R500 crossbow, the R26/R26X crossbow, and the R29/R29X crossbow. Ravin makes two noninfringement arguments. First, Ravin contends that none of its crossbow models have the latch positioned in the cavity defined by the extension member and the stock. Second, Ravin contends that in the R26 and R29 crossbows, the cheek rest and the butt are not distinct structural components as claimed in the '435 patent. The court will follow the lead of the parties and focus on independent claim 1.

[19] The asserted dependent claims of the '435 patent are claims 2, 3, 6–8, 10–13, and 15.

a. "Latch positioned in the cavity" limitation

The parties agree that Ravin's accused crossbows meet elements in the first six subparagraphs of claim 1. Those elements are a stock with a bow portion attached to it, a latch that holds the bowstring in the drawn position, a trigger, a handgrip, and a butt located reward of the latch. The parties' dispute centers on an element in the final subparagraph of the claim:

> an extension member positioned above said stock, the extension member comprising a cheek rest and a picatinny rail, a height of the cheek rest above the stock being less than a height of the picatinny rail above the stock, the cheek rest shaped differently from the picatinny rail, **the extension member and the stock defining a cavity, the latch positioned in the cavity.**

'435 patent, 9:21–27 (emphasis added). Parsing the final subparagraph into elements, the parties agree that the accused products have an extension member comprising a cheek rest and a picatinny rail and that the extension member and the stock define a cavity. The ultimate infringement dispute concerns the requirement that the latch be positioned in the cavity defined by the extension member and the stock.

MCP asks the court to apply the plain meaning of the claim language, which requires only that the latch be in the cavity between the extension member and the stock. Ravin, and its expert Duffner, concede that the plain language requires nothing more. Dkt. 69, ¶ 335 (Duffner report). And Ravin concedes that, when the accused crossbows are in the drawn condition, the latch is in the cavity.

Ravin contends that the court should read a further limitation into the claim language, based on an argument that MCP made in its opposition to Ravin's motion to amend its pleadings to add the inequitable conduct counterclaim. Ravin contends that MCP conceded that claim 1 must be read to require that "the ***entire*** latch be disposed beneath the cheek rest," which itself must be over the cavity. Dkt. 109 (Ravin reply brief), at 6.

The court agrees that MCP made this argument earlier in this case. Ravin's inequitable conduct argument is, in part, that the Desert Stryker crossbow discloses a latch located in a cavity between the stock and an extension member. In arguing against allowing Ravin to amend its pleading, MCP argued that the Desert Stryker would not have been material to patentability because the Desert Stryker lacked limitations in the claims of the '435 patent. In making that argument, MCP advocated a narrow construction of claim 1 of the '435 patent:

> The "extension member" must "comprise" a "cheek rest" meaning, at minimum, that **the "cheek rest" extends over the "extension member" and the "cavity" defined by the extension member**. Second, limitations establishing that the proper and comfortable shooting position requires the shooter to place their cheek above the cavity defined by the extension member, and more preferably, the latch that retains the bowstring.

Dkt. 54, at 5–6 (emphasis added).

Ravin contends that under the proper narrowed construction, the cheek rest is not above the latch in the accused products. The following photo illustrates Ravin's argument. The cheek rest is outlined in green, with its furthest forward point marked with a green line. The yellow line marks the placement of the latch:

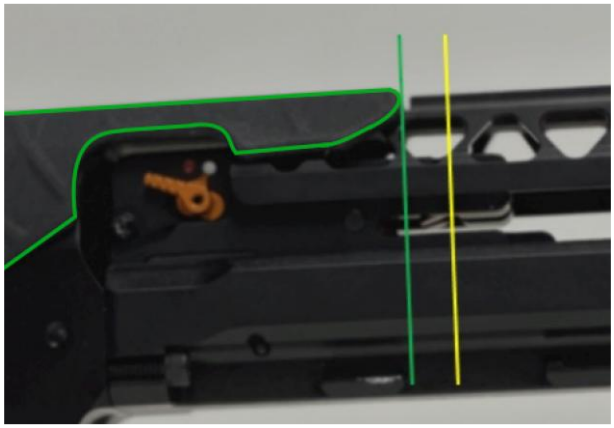

Dkt. 78, at 34 (showing the R500; other photos show a similar configuration in the R26, and R29 crossbows, *id.* at 35). As the photo shows, the latch is not below the cheek rest.

But Ravin's argument has a flaw: Ravin does not explain the legal basis for its contention that MCP must be held to the argument it made in response to Ravin's motion to amend its pleading. MCP's statements were not made to the Patent Office during prosecution of the '435 patent, so the doctrine of file wrapper estoppel doesn't apply. *Phillips*, 415 F.3d at 1317. Because the statements were made earlier in this case, the most appropriate legal doctrine would appear to be judicial estoppel. But the conditions for judicial estoppel aren't met, because MCP didn't prevail in opposing Ravin's motion to amend. "This rule, known as judicial estoppel, 'generally prevents a party from prevailing in one phase of a case on an argument and then relying on a contradictory argument to prevail in another phase.'" *New Hampshire v. Maine*, 532 U.S. 742, 749 (2001) (citation omitted). The court granted Ravin's motion to amend its pleadings. Dkt. 61. MCP isn't estopped from abandoning a losing argument.

Ravin's argument has another problem. The inventor added the very limitation that Ravin asks the court to read into claim 1 in dependent claim 2. Claim 2 claims "The crossbow of claim 1, at least a portion of said cheek rest oriented over said latch." '435 patent, 9:28–29. Under the doctrine of claim differentiation, the addition of that element in a dependent claim gives rise to a presumption that the independent claim doesn't include it. *Curtiss-Wright Flow Control Corp. v. Velan, Inc.*, 438 F.3d 1374, 1380 (Fed. Cir. 2006).

The court will construe claim 1 as MCP requests, according to its plain language. For the disputed limitation, all that's required is that the latch be below the extension member, in the cavity created by the extension member and the stock. The latch does not have to be below the cheek rest. The undisputed evidence shows that Ravin's accused crossbows meet this limitation.

Ravin's motion for summary judgment of noninfringement based on the limitation related to the placement of the latch is denied.

b. Butt and cheek rest of the R26 and R29 crossbows

Ravin's second noninfringement argument relates only to the R26/R26X and the R29/R29X crossbows. Ravin contends that claim 1 requires that the cheek rest and the butt must be two separate structures, but in the R26 and R29, the cheek rest and butt are a single integrated component. There's no dispute about the structure of the R26 and R29; Ravin's noninfringement contention again depends on claim construction. Ravin's argument is that claim 1 should be construed to require that the cheek rest and butt be two separate structures simply because they are listed as separate claim elements. Dkt. 78, at 37 (citing *Kyocera Senco Indus. Tools Inc. v. ITC*, 22 F.4th 1369, 1382–83 (Fed. Cir. 2022) (citing *Becton, Dickinson & Co. v. Tyco Healthcare Grp., LP*, 616 F.3d 1249, 1254 (Fed. Cir. 2010))).

Ravin misapplies the principle in *Becton*. "Where a claim lists elements separately, the clear implication of the claim language is that those elements are distinct components of the patented invention." *Becton* at 1254 (citation, internal quotations, and alteration omitted). *Becton* concerned a patent for a safety hypodermic needle. The claim listed elements in separate subparagraphs including both a "spring means" for pushing a guard over the tip of a needle after use, and a "hinged arm" that attached the guard to the needle. 616 F.3d at 1254. The independent claims of the patent describe the spring means as being "connected to" the hinged arm and as "extending between" the hinged arm and a mounting means. The Federal Circuit held that the correct claim construction required the hinged arm and spring means to be separate structures, reasoning that it would be impossible to meet the "connected to" or

"extending between" limitations if "the hinged arm and the spring means [were] one and the same." *Id.* at 1255.

The court agrees that claim 1 of the '435 patent describes the "butt" and the "cheek rest" in separate subparagraphs. The court also agrees that given any fair reading of the claim, the butt and the cheek rest are separate components. But nothing in the claim or the specification suggests that they must be physically separated, rather than molded together in a single piece. Consider a frying pan. It has two distinct components: a shallow pan and a handle. In some frying pans the handle might be attached to the pan with a bolt. But the same two components are also present in a cast iron frying pan, even though they are both cast in a single mold. In *Becton*, there was claim language suggesting physical separation: the spring means was described as "connected" to the hinge and "extending between" the hinge and a mounting means. There's no language implying any physical separation of the butt and cheek rest here.

The specification of the '435 patent provides some guidance about the position of the cheek rest in relation to the butt. The butt must be "located rearward of the latch" and "spaced apart from the handgrip," and the cheek rest must be part of the extension member "shaped differently from the picatinny rail." '435 patent, 9:19–26. The specification also teaches that, "[d]esirably, a cheek rest is oriented with respect to the butt such that a shooter's cheek can easily rest against the cheek rest when the crossbow is held with the butt braced against the shooter's body (e.g. shoulder)" and that "[i]n some embodiments, the cheek rest extends rearward to the rear end of the crossbow." '435 patent, 4:28–33. The figures show that in some embodiments the cheek rest extends to the rear end of the crossbow, where it would be in contact with the butt, further supporting that the cheek rest can be a continuous structure with

the butt. Nothing in the specification rules out the molding of the butt and cheek rest together, just as the pan and handle may be cast together.

Ravin contends that the inventor of the '435 patent intended the invention to exclude an integrally formed structure with both a cheek rest and butt because the specification does not disclose any embodiments where the cheek rest and butt are integrated. *See* Dkt. 78, at 37–38.[20] But that argument is contrary to the basic rule that one does not read the features of the embodiments into the claims as limitations. *Teleflex, Inc.*, 299 F.3d at 1326. The inventor does not have to anticipate and separately claim every possible embodiment of his invention. *See GE Lighting Sols., LLC v. AgiLight, Inc.*, 750 F.3d 1304, 1309 (Fed. Cir. 2014).

The court concludes that in claim 1 of the '435 patent requires both a cheek rest and butt, but that these limitation may be met with structures that are molded together. The R26 and R29 crossbows have both a cheek rest and a butt. Accordingly, the court will deny Ravin's motion for summary judgment of noninfringement for the R26/R26X and the R29/R29X crossbows.

3. Validity

Ravin brings two counterclaims related to the '435 patent. First, Ravin contends that the patent is invalid as anticipated by the Stryker patent. Second, it contends that the claims of the '435 patent are unenforceable due to inequitable conduct during the patent's prosecution. Ravin moves for summary judgment on its counterclaim based on anticipation,

[20] In its reply brief, Ravin contends that that MCP distinguished the patent from the prior art when prosecuting the patent by telling the patent office that the cheek rest was part of the extension member rather than part of the buttstock. Dkt. 109, at 12–13. But Ravin did not raise this contention in its opening brief, so Ravin has forfeited this argument. *White v. United States*, 8 F.4th 547, 552–53 (7th Cir. 2021) (arguments raised for first time in reply brief are waived).

and MCP moves for summary judgment on Ravin's counterclaim based on inequitable conduct.[21] The court will address each of these issues in turn.

a. Anticipation

Ravin contends that if the scope of the '435 patent is not limited to require that the latch be positioned beneath the cheek rest, then it is anticipated by the Desert Stryker crossbow. The parties agree that the Desert Stryker crossbow was on the market by 2009, and thus it is prior art to the '435 patent, which claims priority from provisional application 61/489727, filed on May 25, 2011.

As an issued patent, the '435 patent is presumed valid, and Ravin can overcome this presumption only by establishing invalidity through clear and convincing evidence. 35 U.S.C. § 282; *Novo Nordisk A/S v. Caraco Pharm. Labs. Ltd.*, 719 F.3d 1346, 1352 (Fed. Cir. 2013). Anticipation is a question of fact that may be decided on summary judgment if no genuine dispute of material fact exists. *OSRAM Sylvania, Inc. v. Am. Induction Techs., Inc.*, 701 F.3d 698, 704 (Fed. Cir. 2012). "Under 35 U.S.C. § 102(b), a prior art reference will anticipate if it 'disclose[s] each and every element of the claimed invention . . . arranged or combined in the same way as in the claim.'" *Blue Calypso, LLC v. Groupon, Inc.*, 815 F.3d 1331, 1341 (Fed. Cir. 2016) (citation and footnote omitted). Although a prior art reference must arrange or combine the elements of the claimed invention in the same way as the claim, the reference need not

[21] MCP also moved for summary judgment on Ravin's affirmative defense that the '435 patent is invalid for indefiniteness of the terms "properly place a scope" and "said cheek rest comprising a peak." But Ravin states in its response that it "is no longer pursuing an indefiniteness theory with respect to [those] term[s]." Dkt. 93, at 46. So the court will grant MCP's motion for summary judgment those issues as unopposed.

disclose the elements in precisely the same language. *Whitserve, LLC v. Comput. Packages, Inc.*, 694 F.3d 10, 21 (Fed. Cir. 2012).

Ravin contends that the Desert Stryker includes every limitation of independent claim 1 and dependent claims 6–8, 10–13, and 15 of the '435 patent. MCP concedes that most limitations are met by the Desert Stryker. But the parties dispute whether the Desert Styker has an extension member that includes a cheek rest as required by claim 1.

Ravin's argument is illustrated by a photograph of the Desert Stryker with annotations added by both sides:

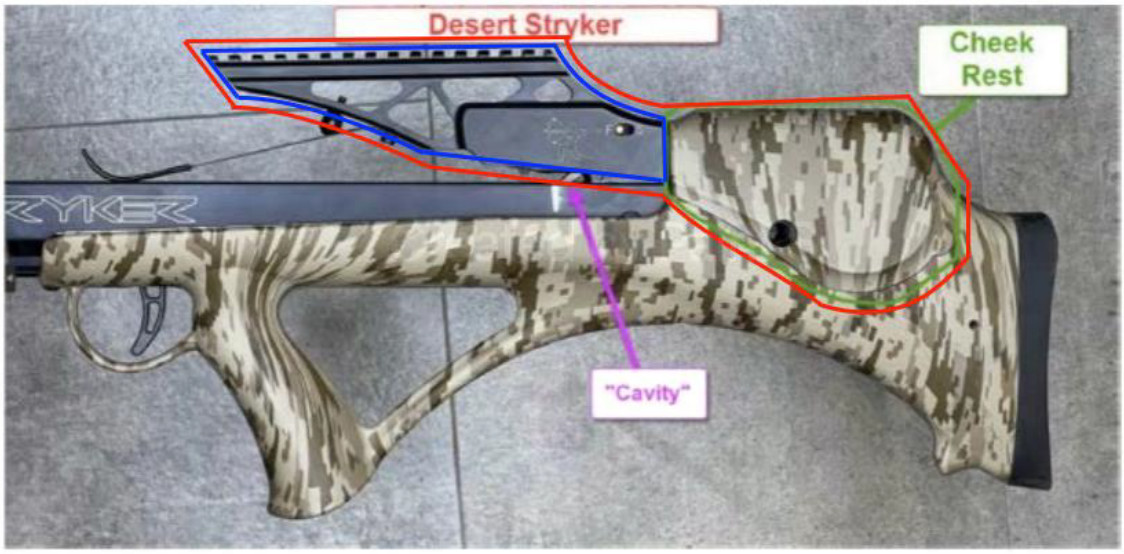

Dkt. 108 (Ravin reply brief), at 11. MCP's expert, Paulus, identified and labeled the cavity and the cheek rest. Dkt. 72, at 149–50. Ravin does not dispute those identifications. Ravin's counsel added the blue outline to identify the picatinny rail and the red outline to identify the entire extension member. Ravin contends that the cheek rest is part of the extension member, so that "the extension member compris[es] a cheek rest and a picatinny rail," as claimed in the '435 patent. But Ravin does not explain its position or cite evidence to support it.

The claim construction question lurking here is the meaning of "extension member," for which neither party proposed a construction. Apparently, in Ravin's view, the extension member is simply the combination of the picatinny rail and the cheek rest, and so the cheek rest is, by definition, part of the extension member. One problem with Ravin's perspective is apparent from its identification of the picatinny rail in the annotated photo of the Desert Stryker. "Picatinny rail" is a term of art in the field of firearms, and it refers to a standardized slotted accessory mount typically attached to the top of the receiver of a firearm. *See Insight Tech., Inc. v. SureFire, LLC*, 447 F. Supp. 2d 120, 133 (D.N.H. 2006). The Desert Stryker includes a picatinny rail. But what Ravin labels as the "picatinny rail" in the annotated photo includes not only the picatinny rail itself, but also the support frame for the picatinny rail and the component that houses the latch mechanism. A person of skill in the art would not consider these components to be part of the picatinny rail. The point here is that the extension member is not simply the combination of the picatinny rail and the cheek rest.

"Extension member" is not a term of art, and the specification does not provide an express definition for it. The court must determine the ordinary meaning of the term "extension member" as it would be understood by a person of skill in the art. The court construes the term by first considering the words of the claim and then considering the claim in view of the specification. *Phillips*, 415 F.3d at 1315. In structural and mechanical engineering, a "member" is a "component of a structure." *Member*, Oxford Dictionary of Mechanical Engineering (2013). In claim 1, the extension member *comprises* a cheek rest and a picatinny rail. The term "comprising" is well understood in patent litigation to mean "including but not limited to." *CIAS, Inc. v. All. Gaming Corp.*, 504 F.3d 1356, 1360 (Fed. Cir. 2007) (citing *Vivid Techs., Inc. v. Am. Sci. & Eng'g, Inc.,* 200 F.3d 795, 811 (Fed. Cir. 1999). The use of the term "comprising"

means that the extension member is not limited to the combination of a cheek rest and picatinny rail. And the ordinary meaning of the term "member" in mechanical engineering suggests that the extension member is a structural component of the crossbow.

The specification makes clear that the extension member is a component of the crossbow, separate from the stock and at least partly above the stock, to which accessories may be attached. For example, in this passage the extension member is described as a cantilever:

> In some embodiments, at least a portion of the extension member **48** comprises a cantilever member that extends over a portion of the barrel **14**. Desirably, the extension member **48** extends over the latch **20**. In some embodiments, a portion of the extension member **48** oriented over the latch **20** comprises a cantilever. Desirably the extension member **48** comprises a mount for various accessories or other portions of the crossbow **10**, such as a cheek rest **50**, accessory mount **60**, etc.

'435 patent, 4:10–19. The preceding passage suggests that the inventor contemplated that both the accessory mount and the cheek rest would either be attached to, or be made part of, the extension member.

But the extension member is not merely the combination of the cheek rest and the picatinny rail. The following passage suggests that the extension member has other functions besides providing a cheek rest and an accessory mount:

> In some embodiments, a lowest portion of the extension member **48** oriented above or in front of the latch **20** is located at a height above the latch **20.** For example, the cavity **58** can extend forward of the latch **20.** This helps to ensure that the extension member **48** will not interfere with the string **42.**
>
> In some embodiments, the extension member **48** comprises a front guide portion **64** that can help guide the string **42** toward the latch **20** during draw, should the string **42** contact the extension member **48**.

'435 patent, 4:50–59. The following passage makes clear that the picatinny rail is just one of the items that may be attached to the extension member:

> In some embodiments, the extension member **48** defines an accessory mounting location **60.** In some embodiments, the extension member comprises an accessory mount **61** configured to receive standardized accessories, such as a Picatinny rail or tactical rail. Any suitable accessory, such as sights, optics, lights, etc., can be mounted at the accessory mounting location **60.** Desirably, the accessory mounting location **60** is oriented forward of a cheek rest **50** and at a height above the cheek rest **50,** which allows for sights/scopes to be properly placed at eye level when a shooter's face contacts the cheek rest **50.**

'435 patent, 5:39–49.

As for the cheek rest, the specification describes embodiments in which the cheek rest is "supported by the extension member," suggesting that the cheek rest may be a separate component attached to the extension member. '435 patent, 4:21–25. Alternatively, the cheek rest may be "a unitary portion of the extension member" making it an integral part of the extension member. '435 patent, 4:21–25. To meet the requirements of claim 1, the extension member must include a cheek rest. This means that the cheek rest must either be attached to the extension member or must be an integral part of it. It's not enough for purportedly anticipating prior art to have a cheek rest; the cheek rest must be attached to be part of the extension member.

The Desert Stryker crossbow has an extension member, to which a picatinny rail is attached. But the cheek rest of the Desert Stryker crossbow is not attached to or an integral part of the extension member. Rather, the cheek rest is a separate component that is mounted to the stock of the crossbow. That the cheek rest is not part of the extension member is confirmed by the following photo, which shows that the cheek rest can be detached from the stock:

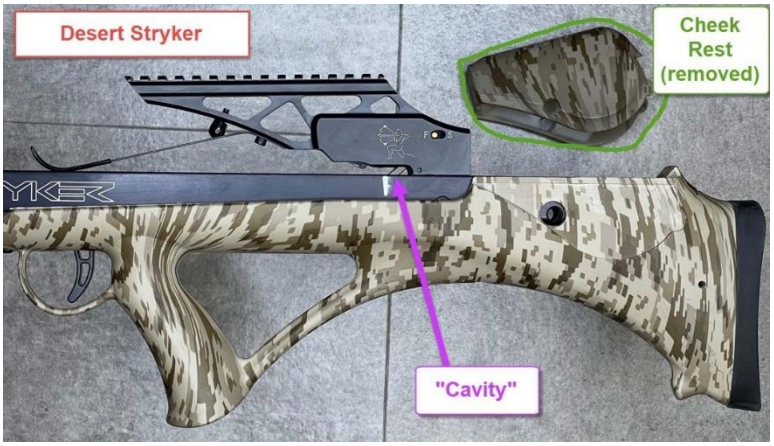

Dkt. 105, ¶ 219. This photo shows that in the Desert Stryker, the cheek rest is not part of the extension member.

The court concludes that the Desert Stryker crossbow does not anticipate the ’435 patent because its extension member does not include a cheek rest as required by claim 1. With the cheek rest separate from and well behind the extension member, the Desert Stryker doesn’t achieve the compact form that is the is the advantage of the ’435 patent. The court will deny Ravin’s motion for summary judgment on its counterclaim for invalidity based on anticipation; the court will grant MCP’s motion for summary judgment on that point.

b. Inequitable conduct

Ravin also contends that the '435 patent is unenforceable because MCP did not disclose the Desert Stryker crossbow as prior art during the prosecution of the '435 patent. MCP moves for summary judgment on this counterclaim, contending that Ravin has failed to adduce evidence that the Desert Stryker crossbow would have been material to patentability or that MCP withheld it with the intent of deceiving the patent office.

"Inequitable conduct is an equitable defense to patent infringement that, if proved, bars enforcement of a patent." *Therasense, Inc. v. Becton, Dickinson & Co.,* 649 F.3d 1276, 1285 (Fed. Cir. 2011). The Federal Circuit "tighten[ed] the standard for finding [inequitable conduct] in order to redirect a doctrine that has been overused to the detriment of the public." *Id.* at 1290. Indeed, the Federal Circuit noted that "[t]he habit of charging inequitable conduct . . . has become an absolute plague on [the patent system]." *Id.* at 1289.

Accordingly, an accused infringer faces a high bar in proving inequitable conduct. To prevail, the accused infringer must prove by clear and convincing evidence that the applicant: (1) misrepresented or omitted material information; and (2) did so with the specific intent to deceive the PTO. *Id.* at 1287, 1290; *see Star Sci. Inc. v. R.J. Reynolds Tobacco Co.,* 537 F.3d 1357, 1365 (Fed. Cir. 2008). "[T]he materiality required to establish inequitable conduct is but-for materiality," which means that prior art is "material if the PTO would not have allowed a claim had it been aware of the undisclosed prior art." *Therasense, Inc.*, 649 F.3d at 1291. If the accused infringer meets its burden, then the court must weigh the equities to determine whether the applicant's conduct before the PTO warrants rendering the entire patent unenforceable. *Id.* at 1287.

MCP contends that the Desert Stryker crossbow is not material because it is cumulative of other prior art that was before the patent examiner. Specifically, MCP relies on testimony from its experts that the Desert Stryker crossbow is cumulative of U.S. Patent No. 7,891,348 to Colley, titled "compact crossbow with improved efficiency," and the "standard crossbow" cited as a point of comparison in the provisional application for the parent patent of the '435 patent. Dkt. 72, ¶¶ 186–201. The court will address only Colley, because that is sufficient on its own to show that the Desert Stryker would be cumulative of the prior art considered by the examiner.

The '435 patent is a continuation of the '013 patent that was issued to MCP in 2015. During the prosecution of the '013 patent, MCP amended the claims to overcome a rejection based on Colley. As shown in the following figure, Colley discloses a crossbow in which a latch is positioned under an extension member with a scope mounting rail, with a cheek rest integrated into the extension member:

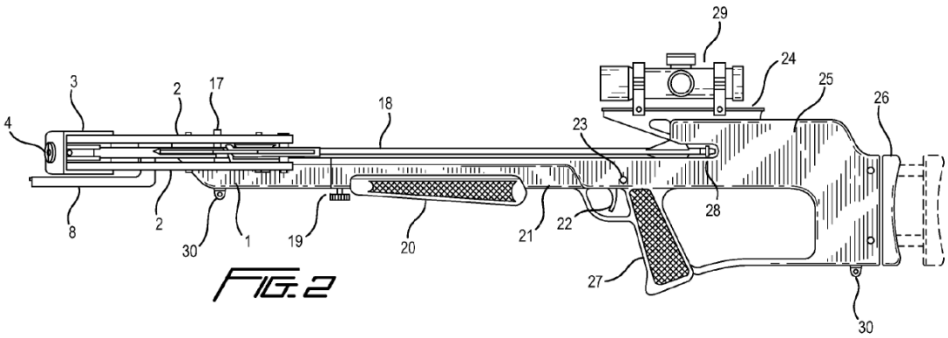

'348 patent, Figure 2. In response to argument by the patentee, the examiner concluded that Colley did not have a cheek rest oriented over the latch. Dkt. 55, Ex. 8, at 52 (stating as a reason for allowance "the specific limitations of an extension member extending over the latch comprising a cheek rest oriented over the latch" after a rejection of the patent as obvious in

view of Colley); *id.*, at 128 (explaining that Colley did not have a latch under the cheek rest and that a skilled artisan would not be motivated to move it there because it would be too close to the shooter's face).[22]

What's important here is that Colley's figure 2 shows a configuration that is in all material respects the same as the Desert Stryker. The cheek rest of Colley (reference number 25) is rearward of the scope mounting rail (reference number 24) and behind the cavity in which the latch is positioned (reference number 28). Because the cheek rest is entirely behind the cavity and scope, it discloses the same configuration of cheek rest, accessory mount, cavity, and latch as the Desert Stryker crossbow. If anything, Colley is closer to the '435 patent because its cheek rest is integrated into the extension member. The same examiner considered Colley as a prior art reference when evaluating the application that eventually issued as the '435 patent. *Id.*, at 51–53; Dkt. 84, Ex. 10, at 127, 133. The Desert Stryker adds nothing to the prior art.

Because Ravin fails to offer evidence that the Desert Stryker crossbow would have been material to the prosecution of the '435 patent, the court need not address Ravin's argument concerning intent to deceive. The court will grant MCP's motion for summary judgment on Ravin's inequitable conduct counterclaim.

[22] Ravin argues that the MCP should be stuck with a narrow construction of claim 1 in which the cheek rest must be over the latch. The court rejected that argument above. Ravin doesn't argue that Colley anticipates the '435 patent even if the '435 patent is given the broader construction.

4. Conclusion

The court will deny Ravin's motion for summary judgment of noninfringement for the '435 patent, and it will grant MCP's motion for summary judgment on Ravin's invalidity counterclaims. The court rejected Ravin's noninfringement arguments regarding claim 1. Ravin doesn't explain why it is entitled to noninfringement on claims 2, 3, 6–8, 10–13, and 15, all of which depend from claim 1. The court understands Ravin to be conceding that the accused devices meet the limitations in claims 2, 3, 6–8, 10–13, and 15 of the '435 patent. The court orders Ravin to show cause why the court should not grant summary judgment in MCP's favor on infringement of claim 1 of the '435 patent, as well as the asserted claims that depend from it.

I. '195 design patent

The D'195 patent claims an "ornamental design for a crossbow rail," as shown below:

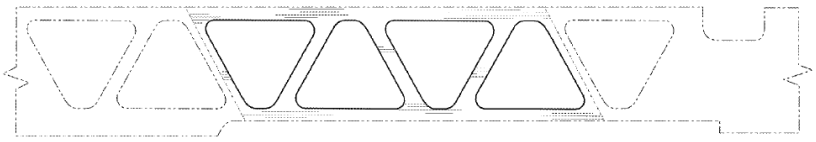

D'195 patent, Figure. MCP contends that Ravin's R500 crossbow infringes the D'195 patent because it features a repeating triangle cutout pattern, shown below:

Dkt. 74, Ex. 15, at 2.

"A design patent only protects the novel, ornamental features of the patented design." *OddzOn Prod., Inc. v. Just Toys, Inc.*, 122 F.3d 1396, 1405 (Fed. Cir. 1997). The claims of design patents are typically presented in drawings, because they are not typically well represented by verbal description. *Sport Dimension, Inc. v. Coleman Co.*, 820 F.3d 1316, 1320 (Fed. Cir. 2016). Design patents do "not broadly cover a design in the abstract," *In re SurgiSil, L.L.P.*, 14 F.4th 1380, 1382 (Fed. Cir. 2021). Rather, design patents are granted only for a design as applied to a particular article of manufacture. *Curver Luxembourg, SARL v. Home Expressions Inc.*, 938 F.3d 1334, 1340 (Fed. Cir. 2019).

To determine whether an accused product infringes a design patent, courts apply the ordinary observer test that the Supreme Court originally set out in *Gorham Company v. White*, 81 U.S. 511 (1871). Under this test, a design patent is infringed when the accused product would appear "so similar to the claimed design that a purchaser familiar with the prior art would be deceived by the similarity between the claimed and accused designs, 'inducing him to purchase one supposing it to be the other.'" *Egyptian Goddess, Inc. v. Swisa, Inc.*, 543 F.3d 665, 683 (Fed. Cir. 2008) (citation omitted). This is a question of fact that MCP has the burden of proving. *Richardson v. Stanley Works, Inc.*, 597 F.3d 1288, 1295 (Fed. Cir. 2010).

Ravin contends that it is entitled to summary judgment of noninfringement for two reasons: (1) the accused product does not have any kind of cutout design on the "crossbow rail" as that term is understood by those familiar with crossbows; and (2) the ornamental pattern on the other components in the accused product are plainly dissimilar to the claimed design of the D'195 patent. The first of these two issues is dispositive.

The parties dispute what qualifies as a "crossbow rail." Ravin contends that the term refers specifically to the part of the crossbow that defines the flight groove in which an arrow sits when loaded and then travels along when the crossbow is fired. Dkt. 78, at 70. Ravin relies on the prosecution history of the D'195 patent and expert testimony to support its contention. MCP contends that Ravin's proposed definition is too narrow. MCP contends that the proper scope of the claimed article of manufacture encompasses other components that run along the length of a crossbow, including the picatinny rail that runs along the top of a crossbow to support a scope and similar rails for attaching accessories that run along the crossbow's bottom.

Typically, the article of manufacture for a design patent is apparent from the drawings. The parts of the article of manufacture that are not part of the claimed design are illustrated with dotted or grayed-out lines. In unusual circumstances where the article of manufacture is not shown in the drawings, "claim language can limit the scope of a design patent where the claim language supplies the only instance of an article of manufacture." *Curver*, 938 F.3d at 1340. The unclaimed portions of the crossbow rail in the D'195 patent figures are minimal and they shed no light on how to construe the term "crossbow rail." The illustration depicts a flat surface with the claimed design of four repeated triangles cut out of a rail with a regular width, apparently extending in both directions.

But the figures in a related patent owned by MCP show a similar ornamental design for a "crossbow rail." U.S. Patent No. D868,194. The '194 patent claims a three-dimensional expression of its design as shown in this perspective view:

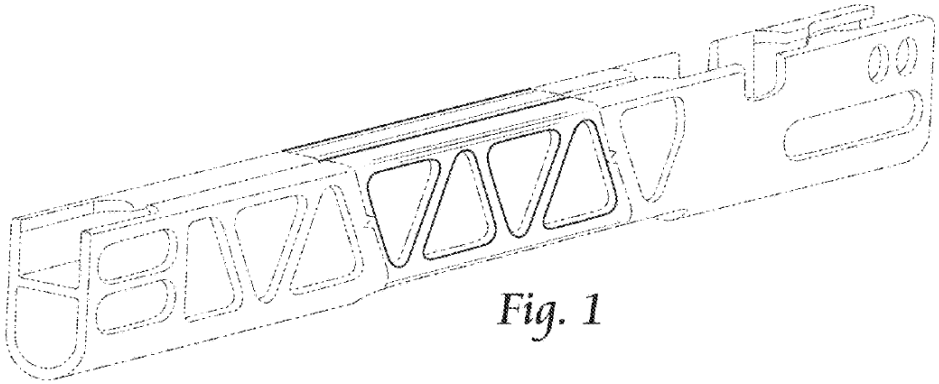

D'194 patent, Figure 1. The article of manufacture shown in the figures of the D'194 patent appears to be a "crossbow rail" because part of the claimed ornamental design relates to the arrow flight track on the top of the rail. This is consistent with Ravin's proposed construction of the term—the long part of the crossbow that holds the arrow, which is how Ravin's expert, Duffner, says one of skill in the art would have understood the term "crossbow rail." Dkt. 69, ¶¶ 284–85.

There is good reason to consider the D'194 patent in construing "crossbow rail" as used in the D'195 patent. The two patents contain the same claim language and a nearly identical design, as recognized by the Patent Office. Moreover, the figures strongly suggest the two patents relate to the same article of manufacture. The sole figure of the D'195 patent includes a notch in the unclaimed portion; a nearly identical notch is shown in the unclaimed portion of the figures of the D'194 patent. During the prosecution of the D'195 patent, the claim was "provisionally rejected on the grounds of nonstatutory double patenting of the claim of copending Application No. 29/632675," which was eventually issued as the D'194 patent. Dkt. 80, Ex. 8, at 4–5. The examiner explained that "[a]lthough the conflicting claims are not

identical, they are not patentably distinct from each other because the pattern claimed within the present application is present and claimed within the copending application" and "[t]he narrowing of the claim to just the pattern in view of the overall appearance of the claim, does not create a patentable distinction between the two copending applications." *Id.* In response to this rejection, MCP agreed to a terminal disclaimer, rendering the D'195 enforceable only during the term of the D'194 patent. Dkt. 110, Ex. 2, at 2–3. The terminal disclaimer and the strong similarity between the unclaimed portions of the D'195 patent and the figures of the D'194 patent provide compelling support for Ravin's argument that the D'195 patent is limited to an ornamental design on the main crossbow rail, meaning the part that contains the arrow track.

MCP fails to offer any evidence to contradict Duffner's opinion that a person of ordinary skill in the art would understand a crossbow rail to refer to a specific component, and it does not address any of Ravin's contentions that the prosecution history supports Ravin's construction. Instead, MCP cites instances in the litigation and Ravin's document production in which Ravin used the term "rail" to refer to other components of its crossbow. But Ravin's statements in other contexts are irrelevant to whether the design in *MCP's* patent is limited designs applied to the main crossbow rail. For example, both parties refer repeatedly to the picatinny rail. And in its discovery requests related to the D'195 patent, MCP referred components of Ravin's crossbow as "the accused rail," which explains why Ravin might use the term "rail" in other contexts. The court sees nothing in Ravin's use of the term rail that contradicts its showing that in the context of the D'195 patent, "crossbow rail" has a specific definition and that it does not mean "any rail on a crossbow."

The court adopts Ravin's construction of the D'195 patent: it is limited to an ornamental design for the main crossbow rail. The triangular cutouts that MCP accuses are on different components of the R500 crossbow, namely the support for the picatinny rail and the fingerguard. There is no dispute that in the R500 crossbow, the main rail is solid without any cutouts. Dkt 69, ¶ 293. Under the court's construction, the accused R500 crossbow does not infringe the D'195 patent. The court need not consider Ravin's alternative argument that any of the cutouts in the R500 crossbow are dissimilar to the design claimed in the D'195 patent. The court will grant summary judgment of noninfringement of the D'195 patent to Ravin.

Nothing in Ravin's complaint or any of the parties' briefing suggests that Ravin faces any risk of future prosecution under the D'195 patent, so there is no need for the court to consider whether the patent is invalid. The court will dismiss Ravin's invalidity counterclaim concerning the D'195 patent without prejudice. Ravin's successive motion for summary judgment that the patent is invalid as obvious, Dkt. 205, is denied as moot.

J. Other motions

The parties have filed several other motions that affect post-summary judgment proceedings. The court addresses them here.

1. MCP's motion to strike expert testimony regarding design arounds for the over-under patent family and '220 patent

MCP moves to strike portions of Ravin's experts' opinions related to design-arounds for the over-under patent family and '220 patent. Dkt. 82, at 95. MCP says that it asked Ravin to identify all design arounds that it intended to rely on for the accused products in an interrogatory, but that Ravin didn't disclose any until its expert reports. MCP contends that it

was prejudiced because MCP's experts did not have an opportunity to respond to Ravin's proposed design arounds.

Ravin concedes that it did not disclose the design arounds in its interrogatory response, but it contends that it was not obligated to do so because its experts did not develop the proposed noninfringing alternatives until they had the opportunity to review Paulus's expert report on infringement. Ravin says that any failure to disclose the design-around theories was harmless, given that there's time for supplemental discovery.

The court's intent in scheduling patent cases is to get the parties to commit to their litigation positions early, so that the liability experts can have their opinions fully disclosed for summary judgment. The question of design arounds, which is to say the availability of noninfringing substitutes, is really a damages issue, but of course it also requires technical expertise. So the court understands why MCP feels aggrieved, because it got technical opinions from Ravin without having an established opportunity to respond with its own experts. The court understands how Ravin might not have had full information about proposed design arounds until after its experts had done their work. The court doesn't need to fix blame; supplemental expert disclosure is warranted.

This solution is particularly easy here, given that we've struck the trial date and expert depositions aren't complete. The court will allow MCP to serve supplemental responsive reports on any design arounds proposed by Ravin's experts. The court will have the parties to confer on the timing of the supplemental reports and the depositions to follow.

The court will deny MCP's motion to strike portions of Ravin's experts' opinions related to design-arounds for the over-under patent family and '220 patent.

2. Appeal of Magistrate Judge Crocker's order granting Ravin's motion to compel

MCP objects to Magistrate Judge Crocker's October 2023 order granting in part Ravin's motion to compel further work on the production of email. Approximately a month after the close of discovery, Ravin moved to compel MCP to comply with the parties' agreement concerning email discovery and to produce the requested email discovery. Judge Crocker held that Ravin's ESI request was overbroad but that the parties' agreement required MCP to provide hit reports for Ravin's initial set of proposed search terms and to give Ravin an opportunity to propose narrowed terms. Dkt. 159, at 7–8. Judge Crocker explained that the parties had some breathing room to complete the negotiations because the trial date had been struck because of a conflict with a large criminal trial and the schedule would not be reset until the court ruled on the pending motions for summary judgment.

MCP contends that this decision was a clear error because the effect of the order was to modify the schedule to give Ravin more time for discovery even though Ravin had not shown that there was good cause to justify modifying the schedule.

A magistrate judge's ruling on a nondispositive issue will be modified or set aside only if it is "clearly erroneous or contrary to law." Fed. R. Civ. P. 72(a). This standard is deferential and will be met only when the reviewing court is "left with the definite and firm conviction that a mistake has been committed." *Pinkston v. Madry*, 440 F.3d 879, 888 (7th Cir. 2006) (citation omitted).

MCP has not shown that the decision to give Ravin an opportunity to propose a narrowed email search protocol was clearly erroneous or contrary to law. The magistrate judge's order was not a final decision about whether MCP would need to produce a particular set of

documents or a ruling that Ravin had carte blanche to continue indefinitely propounding discovery. Instead, the magistrate judge ruled that MCP was obligated to comply with the terms of the email discovery protocol that MCP itself agreed to. The parties' agreement provides that, after a requesting party proposed search terms and custodians, "search terms may be narrowed or broadened as appropriate, subject to the requirement that search terms not generate an unreasonable number of hits." Dkt. 149, Ex. 1, at 3. At the time of the hearing, the court had struck the trial date and the parties had agreed to extend the deadline for completing depositions, as they were allowed to do under the scheduling order in this case. The magistrate judge's decision that the parties' agreement required MCP to continue negotiating email discovery was reasonable.

The court overrules MCP's objections to the magistrate judge's October 2023 order.

3. Appeal of Magistrate Judge Boor's order denying Ravin's motion to compel

Ravin objects to Magistrate Judge Boor's March 2025 order denying its motion to compel production of a licensing agreement between MCP and Bowtech and material that MCP relied on at a damages hearing in its litigation against the company .30-06 Outdoors. Ravin became aware of these documents through discovery in a separate lawsuit between it and MCP, and it contends that the documents are relevant to damages in this case. The magistrate judge concluded that Ravin had failed to diligently pursue discovery or promptly move to compel, and it denied Ravin's motion because it did not identify good cause for the delay.[23]

[23] For reasons that are not clear at this point, MCP's motion for leave to file a sur-reply, Dkt. 183, in opposition to Ravin's motion to compel has not been addressed by the court. The court will deny the motion as moot because Magistrate Judge Boor has ruled on the motion to compel. MCP's moves for leave to file a sur-reply in opposition to Ravin's objection to Judge Boor's order denying Ravin's motion to compel, Dkt. 228. The court grants that motion.

Ravin contends that the magistrate judge erred in finding that it did not act diligently with respect to the Bowtech licensing agreement. Ravin says the magistrate judge did not address that MCP affirmatively represented that there were no other relevant documents related to the Bowtech litigation. Dkt. 227, at 2. But the magistrate judge's order quotes the exact language that Ravin contends was ignored. *See* Dkt. 219, at 5–6 ("Defendant protests that it timely served requests for production seeking the agreement and reasonably relied on plaintiff's representation that 'there is nothing relevant related to [the Bowtech] lawsuit.' Dkt. 169 at 4. But this objection is not an express denial of the existence of any agreement, and defendant should not have taken it as such."). The conclusion that this language was not an express denial of the existence of any agreement was not clearly erroneous.

As for the materials that MCP relied on to prove damages in the .30-06 Outdoors case, Ravin contends that MCP had an obligation to supplement its response to Ravin's request for production asking for documents related to industry licensing practices or royalty rates and that Ravin could not have known that the .30-06 Outdoors case was relevant until an unredacted transcript from the damages hearing was filed in March 2024. But Ravin does not address the magistrate judge's conclusion that Ravin knew that judgment was entered in the .30-06 Outdoors case in March 2023, at which point Ravin could have propounded specific discovery requests about the .30-06 Outdoors case. The magistrate judge did not clearly err by concluding that Ravin failed to exercise diligence to seek the documents in the "many months" between the entry of judgment and Ravin moving to compel in this case.

The court will overrule Ravin's objection to the magistrate judge's March 2025 order.

4. Ravin's motion for leave to supplement its invalidity contentions

Ravin moves for leave to supplement its invalidity contentions to add the contention that the '435 patent is invalid as anticipated by a crossbow from the 1980s called the Barnett Thunderbolt. Dkt. 224. Ravin asserts that the Barnett Thunderbolt was only recently brought to its attention by an unsolicited third party tip, and it could not have located information about the Thunderbolt earlier because it pre-dated the internet. According to Ravin, to find "the decades old crossbow would have required a review of nearly all hunting and archery magazines from the last forty years, an unreasonable expense and expenditure of time." Dkt. 225, at 5.

The deadline for Ravin to submit its invalidity contentions was in August 2022, and the court's preliminary pretrial conference order "strongly cautioned [Ravin] to conduct its prior art search with special diligence and to promptly amend its invalidity contentions as promptly as possible." Dkt. 28, at 2–3. The reason for that strong caution is that late amendments to invalidity contentions are inherently prejudicial and disruptive to the orderly progression of a case to trial. *Signify N. Am. Corp. v. Menard, Inc.*, No. 22-CV-706-JDP, 2024 WL 3252323, at *5 (W.D. Wis. Jul. 1, 2024). If the court granted Ravin's motion for leave to amend its contentions at this point in the case, the court would need to allow additional expert discovery on the new prior art and likely give the parties an opportunity to move for summary judgment on Ravin's new invalidity contention. Rule 16(b) requires that a party seeking to modify a case schedule must show good cause for the modification.

Ravin hasn't shown good cause for the late amendment of its invalidity contentions. Ravin implies that, because the Thunderbolt could have been found in a historical magazine in MCP's archive of industry trade magazines, MCP should have identified it in response to

Ravin's interrogatory asking MCP to identify prior art of which MCP was aware. Dkt. 242, at 2–3. But MCP did not have a duty to conduct Ravin's prior art search for it, even if it had a private library of industry publications. Which leads to another problem with Ravin's position. Ravin seems to assume that a diligent prior art search need only review patents and materials on the internet. But prior art commonly comes from historical material that is not readily available on the internet, and the Thunderbolt was not a secret. Ravin shows that it moved promptly once it got the unsolicited tip and readily found information about the Thunderbolt. But Ravin doesn't explain the scope of its own review of the prior art. In any event, even if the Thunderbolt was the proverbial needle in a haystack, sometimes a lucky break just comes too late in the case to fairly accommodate it.

The court will deny Ravin's motion for leave to amend its invalidity contentions.

CONCLUSION

On the evidentiary issues, the court is granting Ravin's motion to strike the supplemental report from Paulus in part. The court considered the part of Paulus's supplemental report that analyzes the late-disclosed CADD files, specifically paragraphs 7 through 32; the court will exclude Paulus's opinions about the "latch" limitation of the '435 patent and his opinions about the '220 patent, comprising paragraphs 33 through 61 of his report. The court will not exclude Paulus's opinions about Ravin's alleged design arounds. The court is denying MCP's motion to strike the design around opinions from Ravin's experts. The court is overruling both parties' objections to magistrate judge orders and is denying Ravin's motion for leave to amend its invalidity contentions and expert report.

As for the patents-in-suit, the court is ruling as follows:

> ’375 patent: grant summary judgment of noninfringement to Ravin on all asserted claims
>
> ’757 patent: grant summary judgment of noninfringement to Ravin on all asserted claims
>
> ’665 patent: deny summary judgment of noninfringement to Ravin on claim 1 and claim 12
>
> ’433 patent: grant summary judgment of infringement to MCP on all asserted claims; grant summary judgment to MCP on Ravin’s counterclaims of invalidity
>
> ’939 patent: grant summary judgment of infringement to MCP on all asserted claims; grant summary judgment to MCP on Ravin’s counterclaims of invalidity
>
> ’435 patent: deny summary judgment of noninfringement to Ravin on claim 1; grant summary judgment to MCP on Ravin’s inequitable conduct counterclaim
>
> ’893 patent: grant summary judgment of noninfringement to Ravin on all asserted claims
>
> ’056 patent: grant summary judgment of noninfringement to Ravin on claims 5, 6, 14, and 15
>
> ’220 patent: grant summary judgment of noninfringement to Ravin on all asserted claims
>
> ’195 patent: grant summary judgment of noninfringement to Ravin on the asserted claim

The court will order Ravin to show cause why the court should not grant summary judgment to MCP for infringement of claim 1 and claim 12 of the ’665 patent and the asserted claims that depend from those claims; claim 1 of the ’435 patent and the asserted claims that depend from that claim; and claim 1 and claim 12 of the ’056 patent and the asserted claims that depend from those claims. Ravin may have until April 16, 2026, to show cause. MCP may have until April 27, 2026, to respond.

The case will proceed to trial on the following issue: MCP's damages related to Ravin's infringement of the asserted claims of the '433 patent and the '939 patent.

ORDER

IT IS ORDERED that:

1. Defendant Ravin Crossbows, LLC's motion for summary judgment, Dkt. 77 is GRANTED in part as follows:

    a. The R500 does not infringe the asserted claims of the '375 patent.

    b. The R500 does not infringe the asserted claims of the '757 patent.

    c. The R500 does not infringe the asserted claims of the '220 patent.

    d. The R500 does not infringe the asserted claims of the '893 patent.

    e. The R500 does not infringe claims 5, 6, 14, and 15 of the '056 patent.

    f. The R500 does not infringe the D'195 patent.

    g. The remainder of Ravin's motion is DENIED, and Ravin's invalidity counterclaims concerning the '220 patent and the D'195 patent are DISMISSED without prejudice.

2. The court orders Ravin to show cause why it should not grant plaintiff MCP IP, LLC summary judgment for infringement as to:

    a. Claim 1 and claim 12 of the '665 patent and the asserted claims that depend from those claims.

    b. Claim 1 of the '435 patent and the asserted claims that depend from that claim.

    c. Claim 1 and claim 12 of the '056 patent and the asserted claims that depend from those claims.

3. Ravin may have until April 16, 2026, to show cause. MCP may have until April 27, 2026, to respond.

4. MCP's motion for summary judgment, Dkt. 81, is GRANTED in part as follows:

    a. The R500 crossbow infringes the asserted claims of the '433 patent.

b. The R500 crossbow infringes the asserted claims of the '939 patent.

c. The '433 patent is not invalid for indefiniteness.

d. The '433 patent is not invalid for obviousness.

e. The '939 patent is not invalid for indefiniteness.

f. The '939 patent is not invalid for obviousness.

g. The '435 patent is not unenforceable because of inequitable conduct.

h. The remainder of MCP's motion is DENIED.

5. Ravin's motion to strike the expert report of David Paulus, Dkt. 103, is GRANTED in part. The court strikes paragraphs 33 to 61 of Paulus's supplemental report. The motion is otherwise DENIED.

6. MCP's objections to Magistrate Judge Crocker's order regarding email discovery, Dkt. 160, are OVERRULED.

7. MCP's motion for leave to file a sur-reply in opposition to Ravin's motion to compel, Dkt. 183, is DENIED as moot.

8. Ravin's successive motion for summary judgment, Dkt. 205, is DENIED as moot.

9. Ravin's objections to Magistrate Judge Boor's order denying its motion to compel documents regarding royalty rates, Dkt. 220, are OVERRULED.

10. Ravin's motion for leave to supplement invalidity contentions and invalidity expert report, Dkt. 224, is DENIED.

11. MCP's motion for leave to file a sur-reply in opposition to Ravin's objections to Magistrate Judge Boor's order, Dkt. 228, is GRANTED.

Entered March 26, 2026.

BY THE COURT:

/s/

JAMES D. PETERSON
District Judge